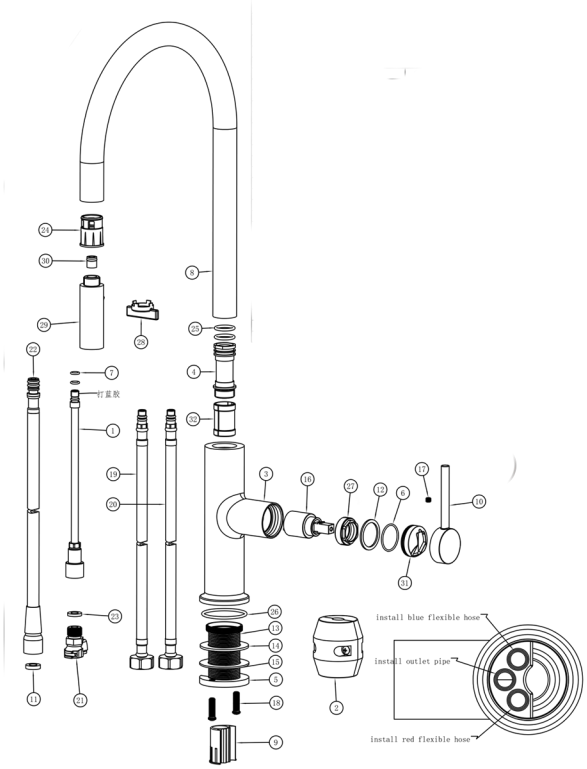DIAGRAM NUMBER	DAX SKU	TITLE DESCRIPTION
1	7070146	192mm outlet pipe
2	7260101	420grs weight ball
3	7010258	Body
4	7080299	Connector
5	7160041	C type brass nut M32
6	7100156	O-ring 28x1.5
7	7100032	O-ring 9.2x1.7
8	7200106	Tube
9	7190010	Plastic protection sleeve
10	7020114	Handle
11	7110108	Mesh gasket
12	7130090	O-ring 31x25x1.5
13	7210001	Shank
14	7110045	Gasket
15	7110046	Washer
16	7140025	25mm cold start cartridge
17	7150066	M5x4 screw
18	7150013	M6x20 screw
19	7070103	M8+9/16 70cm flexible hose (red)
20	7070104	M8+9/16 70cm flexible hose (blue)
21	7080154	M15x1 connector
22	7070147	180cm pull out hose
23	7110058	Gasket
24	7130169	Plastic protection sleeve
25	7100025	O-ring 21x2.5
26	7100084	O-ring 46x2.5
27	7050046	M28x1 lock nut
28	7260318	Sprayer tooling
29	7370035	Sprayer
30	7140101	Ø 10 check valve
31	7040034	Decorative cap
32	7130168	Plastic protection sleeve