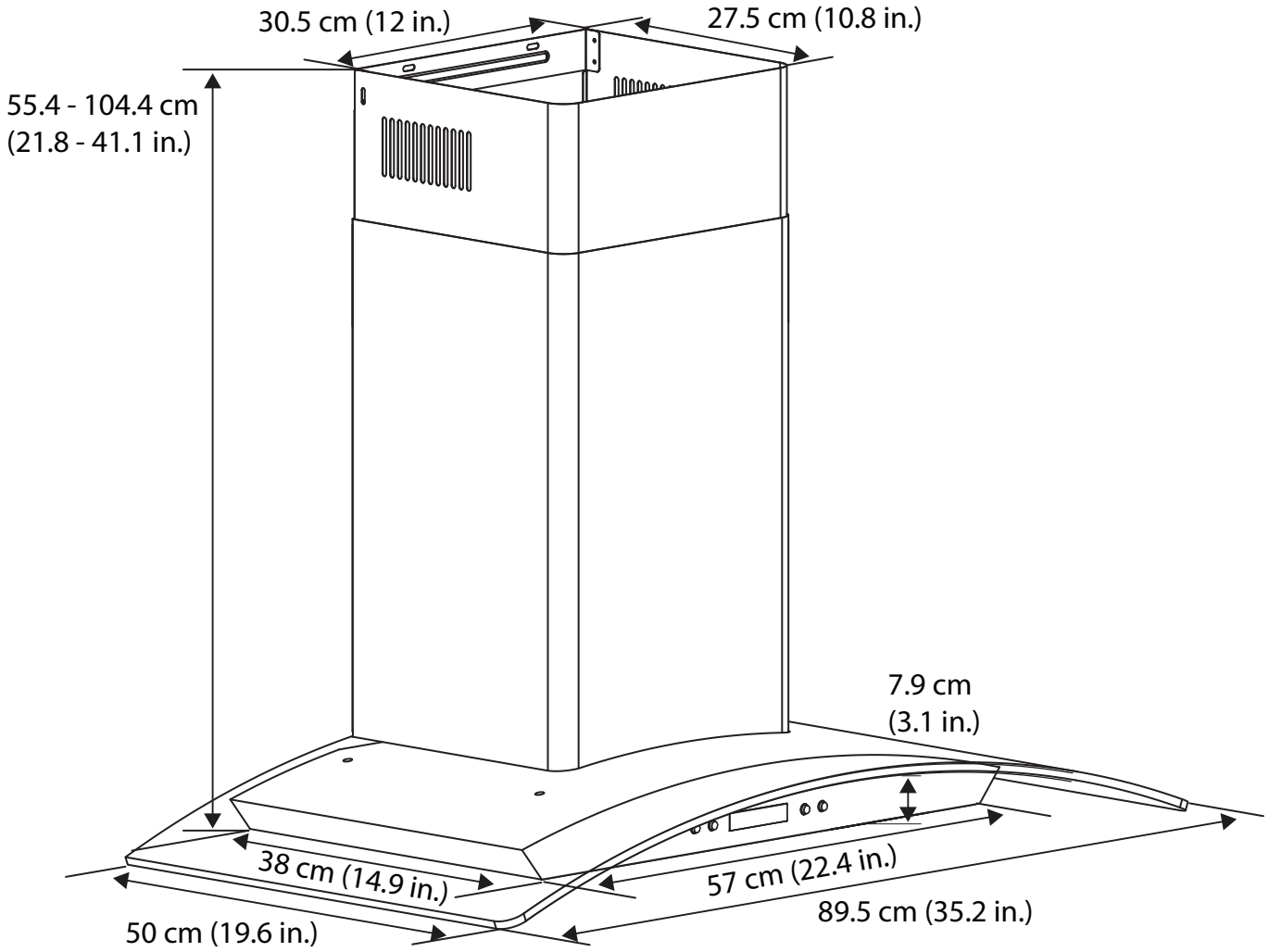
30.5 cm (12 in.)
27.5 cm (10.8 in.)
55.4 - 104.4 cm
(21.8 - 41.1 in.)
7.9 cm
(3.1 in.)
38 cm (14.9 in.)
57 cm (22.4 in.)
89.5 cm (35.2 in.)
50 cm (19.6 in.)