MAIN INDEX

OPERATING INSTRUCTION MANUAL

Rif. N. **366**

C22 Bike

1	SHAFT ASSEMBLY
2	MOTOR + POSITION PICK-UP + PIEZO TRANSDUCER
3-HS	BRAKE (C22 Bike HS only)
4	CASING (1)
6-CM	DISTANCE GAUGE (MANUAL)
7	POWER UNIT

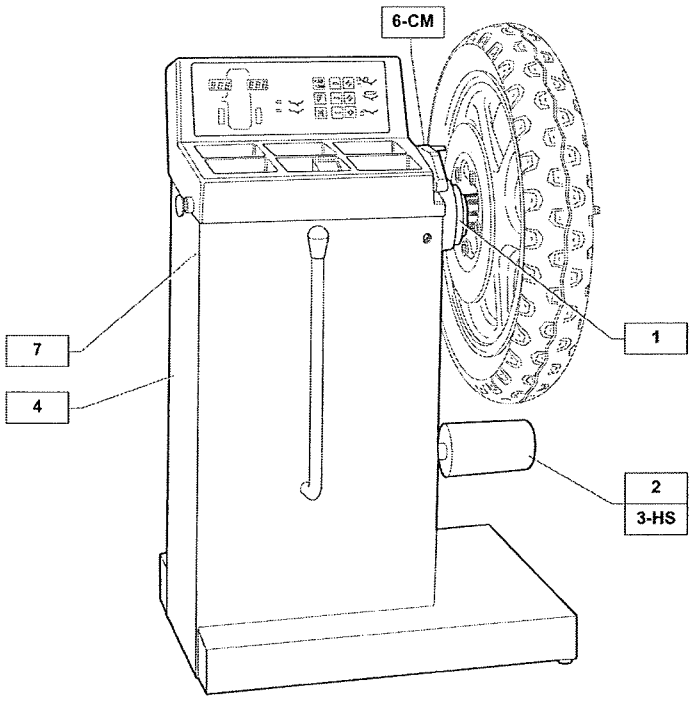

CEMB S.p.A
23826 MANDELLO DEL LARIO (LC) Italy
Via Risorgimento, 9 - Tel. (+39) 0341 706369
Fax (+39) 0341 700725 - EMail garage@cemb.com

CEMB

Dichiarazione CE di Conformità
Declaration of Conformity
EG-Konformitäts-Erklärung
Déclaration de Conformité
Declaration de Conformidad CE
Declaração CE de Conformidade

EC-Verklaring van Overeenstemming
Försäkran om CE-överensstämmelse
CE-overensstemmelses-erklæring
CE-overensstemmelses-erklæring
CE-vaatimusmukaisuus-vakuutus
Δήλωση Συμμόρφωσης CE

La Ditta
The Company
Die Firma
La Maison
La Compañia
A Empresa

CEMB
BALANCING MACHINES
Costruzioni Elettro Meccaniche ing. Buzzi & C. S.p.a.
Via Risorgimento, 9
23826 MANDELLO DEL LARIO - (Lecco) ITALY

Het bedrijf
Företaget
Virksomheden
Virksomheten
Yhtiö
Η εταιρία

dichiara con la presente la conformità del Prodotto
herewith declares conformity of the Products
erklärt hiermit die Konformität desProdukts
déclare par la présente la conformité du Produit
Declare la conformidad del Producto
com a presente declara a conformidade do Produto

verklaart bij deze de onvereenstemming van het product
försäkrar härmed att produkten
erklærer herved, at produktet
bekrefter herved at produktet
vakuttaa että tuote
Δηλώνει με την παρούσα τη συμβατότητα του Προϊόντος

Equilibratrice **Balancer** **Auswuchtmaschine** **Equilibreuse** **Balanceadora** **Máquina de equilibrar**	**Uitlijnapparaat** **Balanseringsmaskin** **Hjulbalanceringsmaskine** **Balanseringsmaskin** **Tasapainotuskone** **Ζυγοσταθμιστής**

Tipo
Type
Typ
Type
Tipo
Tipo

C 22 Bike

Nr. di serie
Serial Number
Fabriknummer, usw
Numero de série
Numero de fabricacion
Número de série

C

Serienummer
Serienr
Serienr
Serienr
Sarjanro
Αρ. Σειράς

Numero Distinta Base
Manufacturing List Number
Erstellungsliste nummer
Numéro de liste de construction
Numero lista de base
Número da Lista de Base

90022C102/3/6

Nummer basislijst
Produktionslistans nr.
Produktionslistens nr.
Produksjonslistens nr.
Valmistusluettelon nro.
Αριθμός Καταλόγου Παραγωγής

alle norme sottostanti / with applicable regulations below / mit folgenden einschlägigen Bestimmungen / selon les normes ci-dessous / con directivas subaplicables / com as normas indicadas em baixo / met de onderstaande normen / överensstämmer med följande föreskrifter / stemmer overens med følgende forskrifter on yhdenmukainen seuraavissa laeissa olevien ehtojen kanssa / στους παρακάτω κανονισμούς

D.P.R. Nr. 459, allegato 1 del 24 Luglio 1996

Direttive CEE / EC Directive / EG Richtlinie / Directive CEE / Directivas CE / Directivas CEE / EEG-richtlijnen EU-direktiv / EØF-direktiver / EU-direktiver / EU-direktiivit / Οδηγίες CEE

98/37/CEE – 73/23/CEE – 93/68/CEE - 89/336/CEE

Norme Armonizzate Adottate /Applied Armonized Standards / Angewendete Harmonisierte Normen / Normes Harmonisées Appliquées / Normas Aplicadas en Conformidad / Normas Harmonizadas Aplicadas / Toegepaste geharmoniseerde richtlijnen / Standarder / Standardit / Εναρμονισμένοι Εφαρμοζόμενοι Κανονισμοί

EN 292-1	X	**EN 292-2**	X	**EN 294**	X	**EN 349**	X
EN 418	X	**EN 457**	X	**EN 60204-1**	X	**EN 60439-1**	X
EN 50081-1	X	**EN 50082-1**	X	**EN 50081-2**	X	**EN 50082-2**	X

Data / Date / Datum / Date / Fecha / Data Datum / Datum / Dato / Pvm / Ημερομηνία	Firma /Signature / Unterschrift /Signature / Firma / Assinatura Handtekening / Underskrift / Allekirjoitus / Υπογραφή
12.11.2003	**CEMB Spa** *Il Presidente* *Ing. Carlo Buzzi*

M06PRG01

INDEX

Page

1 - Description of the balancing machine

1.1 - General information

The new model C22 is designed for balancing motor bike wheels.
It can be used to balance wheels dynamically (i.e. on two unbalance correction planes), a service in increasing demand nowadays because of broader tyres. The balancing speed is very low (about 70 rpm, like in the manual spin models) and the operator is obliged to work with both hand and in a well-defined, safe positin during machine use. For this reason, the usual wheel protection guard is considered unnecessary in many countries. The machine can be equipped with a series of tools for balancing both vehicle wheels with a traditional attachment (15mm or 12 mm shaft) and thwe wheels of the various makes with special attachments (BMW, Honda etc.). A manual spin version is also available.

Particular characteristics:

- Digital correction position reading on the display.
- Unbalance reading rounded to 5 grammes or to 1 gramme (or 0.25 oz).
- Data are set using keys with the fast, simple incremental system.
- **Optimisation programme:** can optimise the position of the tyre on the wheel rim, providing the best compensation for tyre unbalance with the rim unbalance.
- Self-calibration in just 2 spins, using a random wheel, even one that is unbalanced.

1

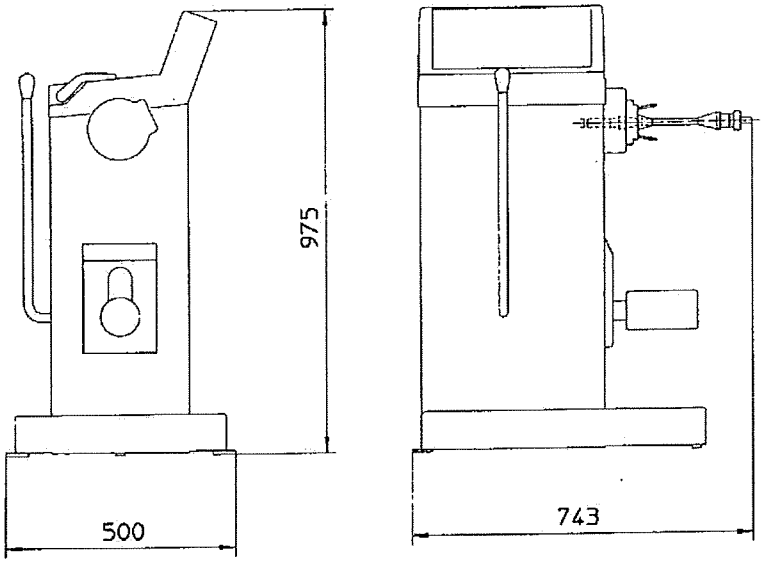

1.2 - Technical data

Max. wheel weight	30 Kg
Max. power absorbed	0,5 Kw
Standard power supply	220/240 V monophase
Balancing accuracy	1 gr
Min/max balancing speed	45/200 rpm
Wheel rim diameter	10" - 24" or 265 - 615 mm
Wheel rim width	1.5" - 20" or 40 - 510 mm
Cycle time	7 - 12 sec
Net weight	60 Kg
Machine bulk	743 x 500 x h = 975 mm
Acoustic pressure level during cycle	< 70 dB (A)
Working environment temperature	0° - 50° C

1.3 - Warnings

- Read the instruction manual carefully before using the balancing machine.
- Keep the manual for future reference.
- Do not remove or modify parts of the machine, as this would stop it functioning correctly. Consult the after salesservice for repairs.
- Do not use strong jets of compressed air to clean the machine.
- Use cleaning spirits to clean the plastic panels and shelves (NEVER USE ANY LIQUIDS CONTAINING SOLVENTS).
- Before you start the balancing cycle, make sure that the wheel is blocked onto the flange correctly.
- The balancing machine operator should not wear clothing with any loose parts; make sure that no unauthorised staff approach the balancing machine during a cycle.
- Make sure that no counterweights or other foreign bodies find their way into the base, as they would stop the balancing machine functioning correctly.
- Under no circumstances should the balancing machine ever be used for any purpose other than those indicated in this manual.

1.4 - Standard safety devices

- Two-handed control to start the balancing spin. During the spin, the operator is obliged to stay in a lateral position, away from the wheel.
- Slow rotation speed.

2 - Lifting and installing

To lift the balancing machine, leverage should only be applied to the three support points available on the base. Under no circumstances should any force ever be applied to other points, such as the mandrel, the head or the accessories panel.
Ensure that all three of the support points of the balancing machine rest on the floor. The machine does not need to be fixed to the floor in order to function correctly.

3 - Power supply

WARNING: **Power connections should only be made by specialised staff. The connection to the monophase mains should be made between live and neutral, never between live and earth. A good earth connection is vital for the machine to function correctly.**
All responsibility and its guarantee is considered null and void if the power connections are faulty.

Before connecting the machine to the power mains with the cable supplied, check that the voltage is the same as the value shown on the plate applied to the rear of the balancing machine. The scale of the power connection should reflect the electrical power absorbed by the balancing machine (see plate).
- The machine's power supply cable must be fitted with a plug that conforms to standards.
- We recommend that you provide the machine with a power connection of its own, complete with an automatic switch.
- If you connect the power line direct to the general power panel, without using any intermediate plug, we recommend you close the balancing machine's main switch with a padlock, so that its use is restricted to authorised personnel.

4 - Fitting the wheel fixture shaft **(See attached prospectus)**

The C22' bike's main advantage is its fixed shaft tool. This means that when the wheel is fitted on the tool, it is free to turn on its own bearings, exactly reproducing the conditions of use when it is fitted on the motor bike.
- Balancing is not affected by inaccuracies in the wheel-flange-shaft coupling typical of traditional rotating shaft balancing machines. This means that you can achieve the best possible accuracy.
- Use the AF12 or AF15 tools with cones and axial blockage rings for wheels with traditional fixture (through- journal).
- Use the rotating AGF tool for wheels with outboard flanged fixture (BMW, Honda).(See specfic brochure for correct assembly).
- Push the chosen tool well home into the balancing machine's hollow shaft and block it in position by tightening the screws accessible from the baseplate hole.

NOTE ON AGF TOOL: ***Remove it from the balancer after use to avoid permanent deformation of brush bristles.***

5 - Fitting the wheel

The AF12 and AF15 fixed shaft tools enable you to fit wheels with a maximum hole of 35 mm on their own bearings. Do not overtighten the threaded ring, as this would put excessive axial load on the bearings. When you fit the wheel, you will notice that the brush adapts automatically (axially and radially) to the shape of the wheel hub. During balancing operations, the brush will turn together with the wheel and transmit the motion to the balancing machine's built-in position transducer. If you use the special AGF tool, the rotating movement will be transmitted to the brush by the rotating part of the tool.

6 - Control panel

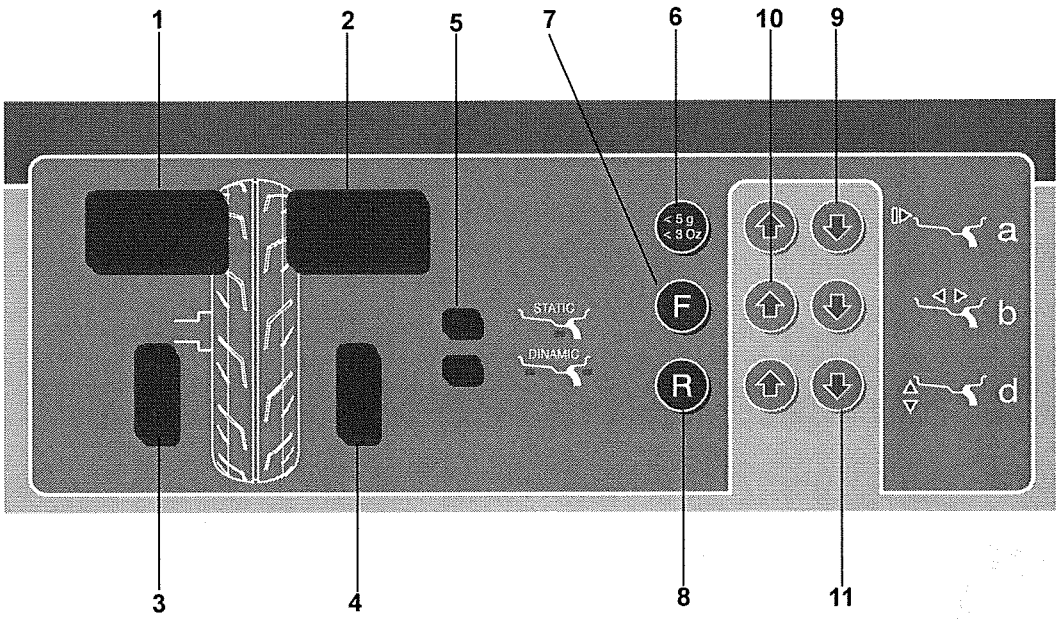

1. Digital display of the UNBALANCE VALUE on the inner side
2. Digital display of the UNBALANCE VALUE on the outer side
3. Digital display of the UNBALANCE POSITION on the inner side
4. Digital display of the UNBALANCE POSITION on the outer side
5. Displays showing type of correction selected
6. Key for reading unbalance <5 g. (0.3 oz) (self-calibration, selection g/oz, mm/inches)
7. Key for selecting type of correction
8. Key for recalculating, self-calibration and optimisation
9. Keys for calibrating DISTANCE manually
10. Keys for calibrating WIDTH manually
11. Keys for calibrating DIAMETER manually

7 - Setting dimensions

2

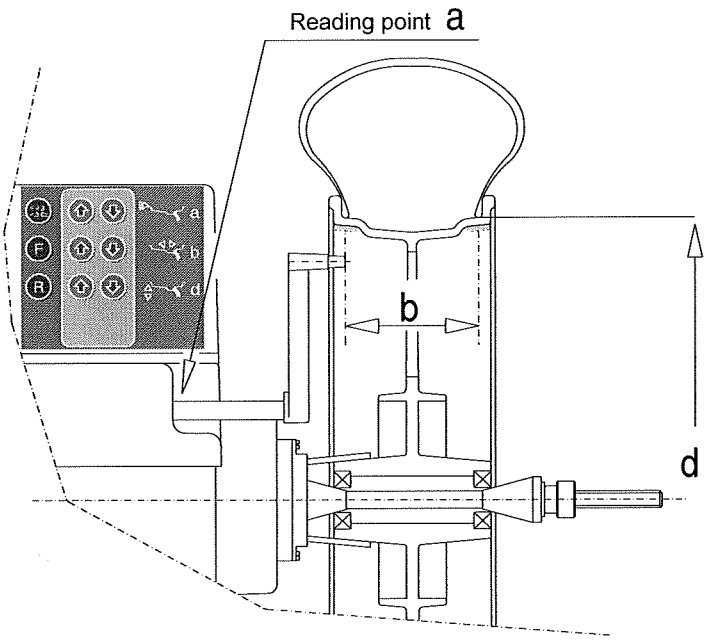

3 : DISTANCE

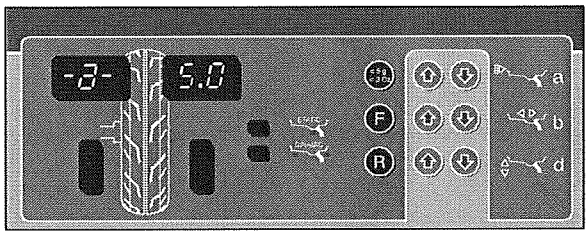

Determine the distance **'a'** on the barycentre of the inner correction weight, then set it as shown in Fig. 2.

4 : WIDTH

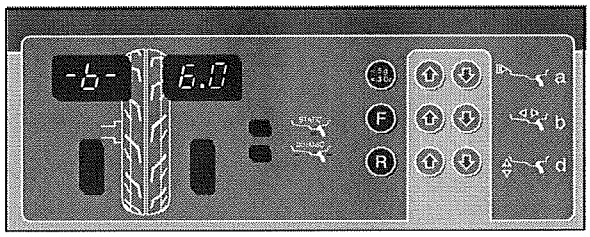

It is essential that you determine and set accurately the distance **'b'** between the barycentres of the weights where they will be applied.

5 : DIAMETER

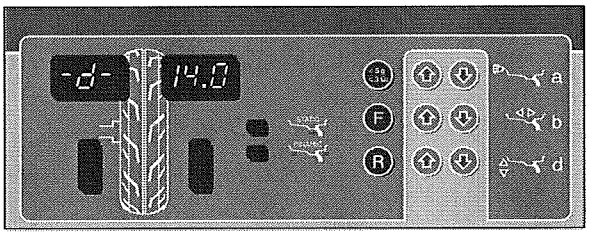

Set the nominal diameter **'d'** as shown on the tyre.

7.1 - Using the distance gauge extension

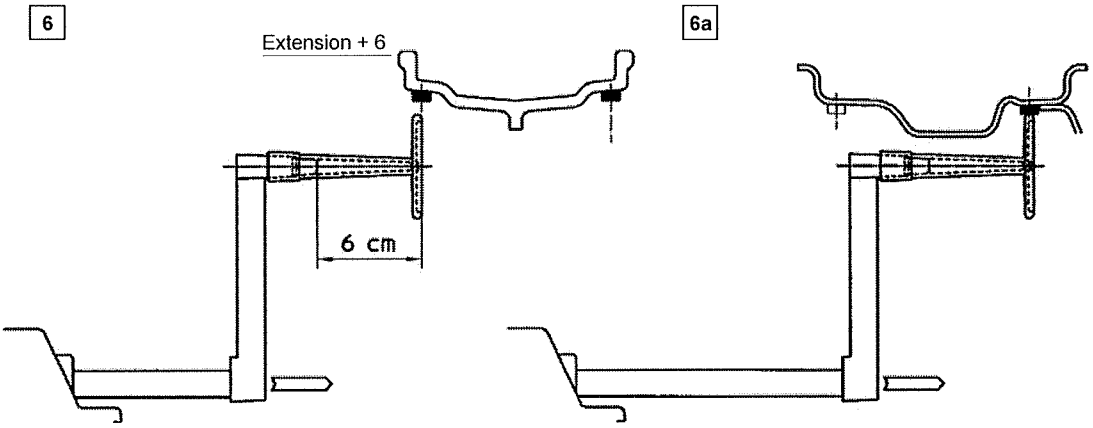

The extension increases the range of measurement of the gauge by 6 cm (fig. 6) and allows distance measurement also when the rim is of special shape (fig. 6a).
Proceed as follows:
- fit the extension on the distance gauge.
- Proceed to the distance measurement in the modes described earlier on.
- After reading value " a " on the index, reset the gauge to " 0 " and manually preset the value " a + 6 ".
- Preset the diameter and width manually as described in fig. 2.

7.2 - Options

SELECTIONS KEPT STORED IN THE MEMORY WHEN THE MACHINE IS SWITCHED OFF:

➔ - UNITS of unbalance measurement grammes/ounces

SELECTIONS LOST WHEN THE MACHINE IS SWITCHED OFF:

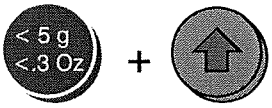

or

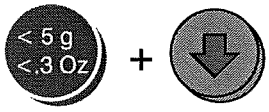

➔ - UNITS of WIDTH measurement mm/inch (from "SETTING DIMENSIONS" selecting WIDTH).
N.B.: default in inches at every machine start-up.

or

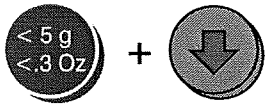

➔ - UNITS of DIAMETER measurement mm/ inch (from "SETTING DIMENSIONS" selecting DIAMETER).
N.B.: default in inches at every machine start-up.

UNBALANCE DISPLAYS:

➔ Dynamic Static Dynamic

8 - Wheel balancing

8.1 - Measuring unbalance

- Shift the front lever rightwards to bring the pulley into contact with the tyre and press the [START] key at the side, keeping the lever pressed to start the wheel spinning. On the model without a motor, spin the wheel by hand making sure the rotation direction is correct.
- Release the lever and the [START] key when the displays go off, the machine will then start making measurements.
- When the displays show the measurement values, brake the wheel by re-establishing contact with the pulley, which is braked when the motor is off. Instruments 1 and 2 will keep the dynamic unbalance values in their memories.

When balancing for static, the value is shown on display 1. On the model without a motor, the external lever operates the brake.

- LEDs on displays 3 and 4 will indicate the correction position. If all the LEDs are alight, this means that the correction weight should be applied to the vertical apex. They mean the same when balancing for static.
- For small diameter wheels (scooters), launch always the wheel by hand in a clockwise direction (see arrow). Measurement always begins when the displays go off.

8.2 - Correcting the unbalance

STATIC: Apply two equal correction weights to the vertical apex of the wheel, one on the inner side and the other on the outer side of the rim. Each weight is half the value indicated by the display.
If you make the correction with lead wire, springs or clamps applied to the spokes, divide it onto one, tow or more spokes, according to the size of the unbalance.

DYNAMIC: Apply the adhesive weights to the shoulders of the wheel rim in the positions indicated by the display for each of the sides.

7 **EXAMPLE OF DYNAMIC CORRECTION ON THE INNER SIDE**

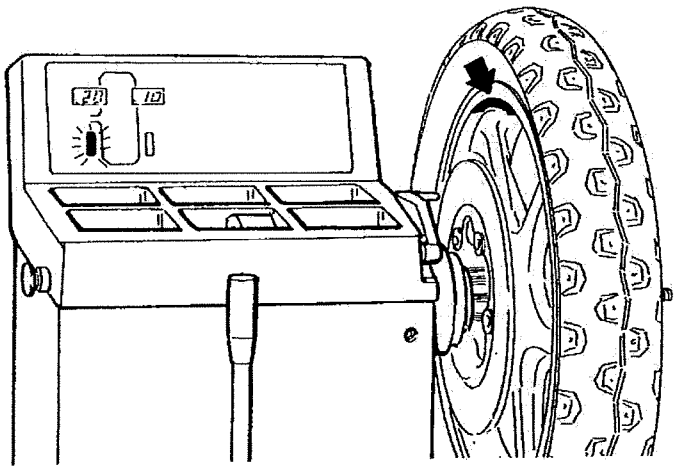

8.3 - Recalculating unbalance values

- Set the new dimensions as described above.
- Press R, without repeating the spin.
- The new recalculated unbalance values will be displayed.

9 - Optimising the unbalance

- Use this function to reduce the amount of weight to be applied to the wheel to balance it.
- Suitable for static unbalance values greater than 30 grammes.
- Improved residual tyre eccentricity can often also be achieved.

Press R + ⇩ a → r.S.

(Press R if you want to cancel the function)

Run a spin → [C⇄]

180

- The display will tell you to turn the tyre on the wheel rim. Make a chalk reference mark on the brush and the wheel rim, so that you can fit the wheel back on the machine in exactly the same position.
- Use a tyre remover to turn the tyre through 180° on the wheel rim.
- Fit the wheel rim back on, making sure that the reference marks on the brush and the wheel rim line up as before.

Run a spin → 45

80↱

Right hand display: % value (↱ symbol) of the possible reduction in unbalance compared to the current situation of the wheel.
Left hand display: current static unbalance value in grammes. This is the value that can be reduced by turning the wheel rim.

Turn the wheel until the outer LEDs light up: mark the tyre at its vertical apex.

45 80↱

Mark the wheel rim in the same way when the inner LEDs light up.

45 80↱

- Now align the two marks.
- In the example, the 45 gramme static unbalance is reduced by 80%, leaving a residual unbalance of about 9 grammes.

10 - Self calibration

10.1 - Balancing machine

Proceed as follows to carry out the machine's self-calibration facility:
- Fit a random wheel on the shaft, even an unbalanced one, although preferably one of average size.
- Set the exact dimensions of the wheel fitted.

N.B. If you make any mistakes while setting these values, the machine will be incorrectly calibrated, so all the later measurements will be faulty until you next carry out the self-calibration with correct measurements.

- Press

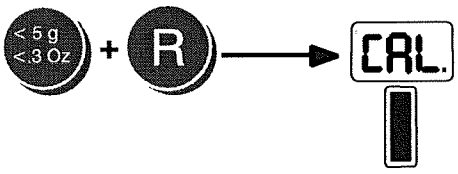

until the positioning LEDs stop flashing and stay on fixed.

- Spin the wheel until all the displays go off.
- Release the wheel and wait (the self-calibration spin may take as much as a couple of minutes). **It is very important that the wheel is not knocked during this spin or re-accelerated after it has been released**, as the machine would then not be able to carry out the self-calibration and would stop with an error reading.

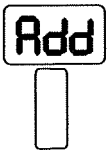

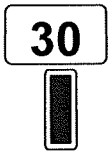

Add a 30 gramme (1 oz) weight to the external side in a random angular position.

- Spin the wheel as already described
- Remove the sample weight and balance the wheel as already described.

- MACHINE CALIBRATED

The values that the machine derives from the self-calibration cycle are stored automatically in a special memory, which will also keep them when the machine is switched off, so that every time that the machine is switched on again, it is ready to function correctly. Nevertheless, the self-calibration operation can be repeated as often as you like or whenever there are any doubts about the machine's correct functioning.

11 - Errors

Machine functioning may be disturbed by various kinds of malfunctions. If these are picked up by the micro-processor, they will be indicated on the display as follows:

ERRORS	CAUSES	CONTROLS
Err. 1	No rotation signal.	1. Verify belt tautness. 2. Verify the function of the phase pick-up board and, in particular, the reset signal. 3. Replace the phase pick-up board. 4. Replace the computer board.
Err. 2	Speed too low during detection. During unbalance measurement rotation, wheel speed is less than 42 rpm.	1. Make sure that a vehicle wheel is mounted on the wheel balancer. 2. Verify belt tautness. 3. Verify the function of the phase pick-up board and, in particular, the reset signal. 4. Replace the computer board.
Err. 3	Unbalance too high.	1. Verify wheel dimension settings. 2. Check detection unit connections. 3. Perform machine calibration. 4. Mount a wheel with more or less known unbalance (less than 100 grammes) and verify the response of the machine. 5. Replace the computer board.
Err. 4	Rotation in opposite direction. After pressing [START], the wheel begins to rotate in the opposite direction (anticlockwise).	1. Verify the connection of the UP/DOWN – RESET signals on the phase pick-up board.
Err. 7 / Err. 8	NOVRAM parameter read error	1. Repeat machine calibration 2. Shut down the machine. 3. Wait for a minimum time of ~ 1 Min. 4. Re-start the machine and verify correct operation. 5. Replace the computer board.

Other error messages may be communicated by the "DYNAMIC" LED during measuring operations.
If this LED flashes once the wheel has been accelerated to regime speed, this means that the regime speed is too fast (>200 rpm). The machine will wait for the speed to drop, when it will cut off the LED and make the measurements.
If the same LED flashes at random during the measurement spin at a speed less than 200 rpm, this indicates that the machine is in a waiting mode, probably because the machine has received a knock. The measurement will be repeated automatically in any case, without any further errors.

* If the error is repeated, consult the after sales service.

12 - Ordinary maintenance (Non-specialised staff)

N.B.: Remember to switch off all power connections to the machine before carrying out any maintenance operations.

12.1- Replacing protection fuses

Two protection fuses are set on the supply board, which can be accessed by removing the weights shelf. If you have to replace these fuses, make sure that you use others with the same electricity load. If the fault happens again, consult the After Sales Service.

13 - List of recommended spare parts (See blow-up tables for references)

Part No.	DESCRIPTION
940013515	Brush complete with bristles c22bike series B
140247801	Mandrel housing in ABS drawing no. 24780G
181247860	Spring drawing no. 24786P
036003530	FIBERGLIDE PAI 3530 ferrules
020601003	6010 - 2Z bearing
140247811	Motor housing in ABS c22bike drawing no. 24781G
940513825	Phase pcb complete with cable and jack
067054210	Grip I 222 / 55 - M10
182185730	Spring drawing no 18573P
507054233	Special monophase motor LM MS 63 C4 0.25 CV B3 220/50
507054133	Special monophase motor LM MS 63 C4 0.25 CV B3 110/60
507054234	Special monophase motor LM MS 63 C4 0.25 CV B3 220/60
050135103	Panel with keyboard model 1351 c22bike
511231002	Switch KL 1002 + Q 555
611018463	Transformer 110/220 - 9/9
940512124	Power supply pcb P11 - P200
681002000	Fuses 5 x 20 - 2A
530090353	CEMA series P9 key
530090011	CEMA series P9
940513300	C22 bike computer pcb

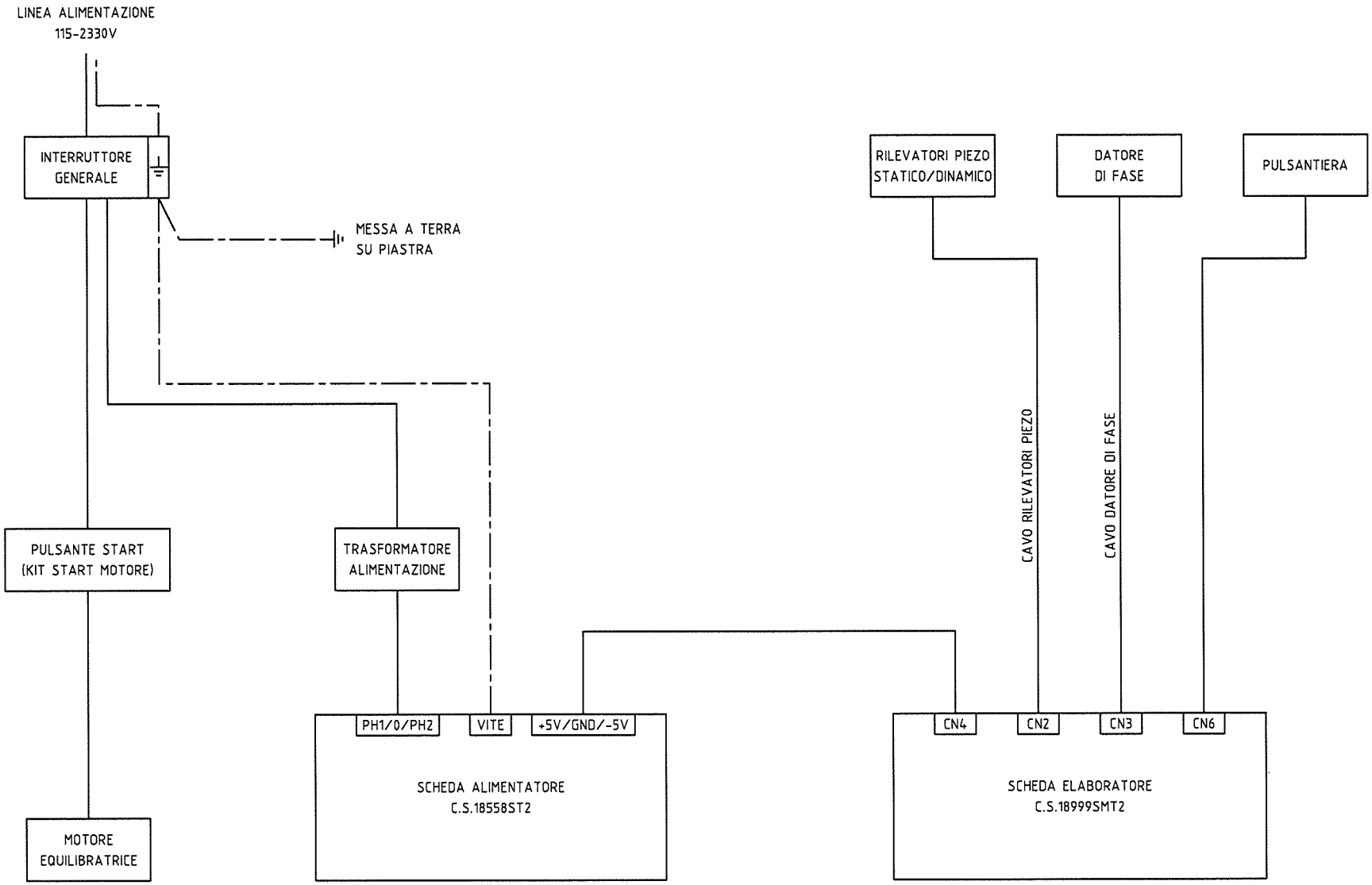

Data:	25/09/2003	Codice:	N° dis.: 61651P	Schema a blocchi	Foglio 1
Disegnatore:	CIAPPESONI			Schema elettrico	di 1
Normativa:	IEC 750				

Tools for motorcycle and scooter wheels C22 Bike

	Tool	AGF
	Tool	AF15
	Toll	AF12

C22 Bike  Universal tool for flanged wheels AGF

AGF
Ø 15
41FF48280

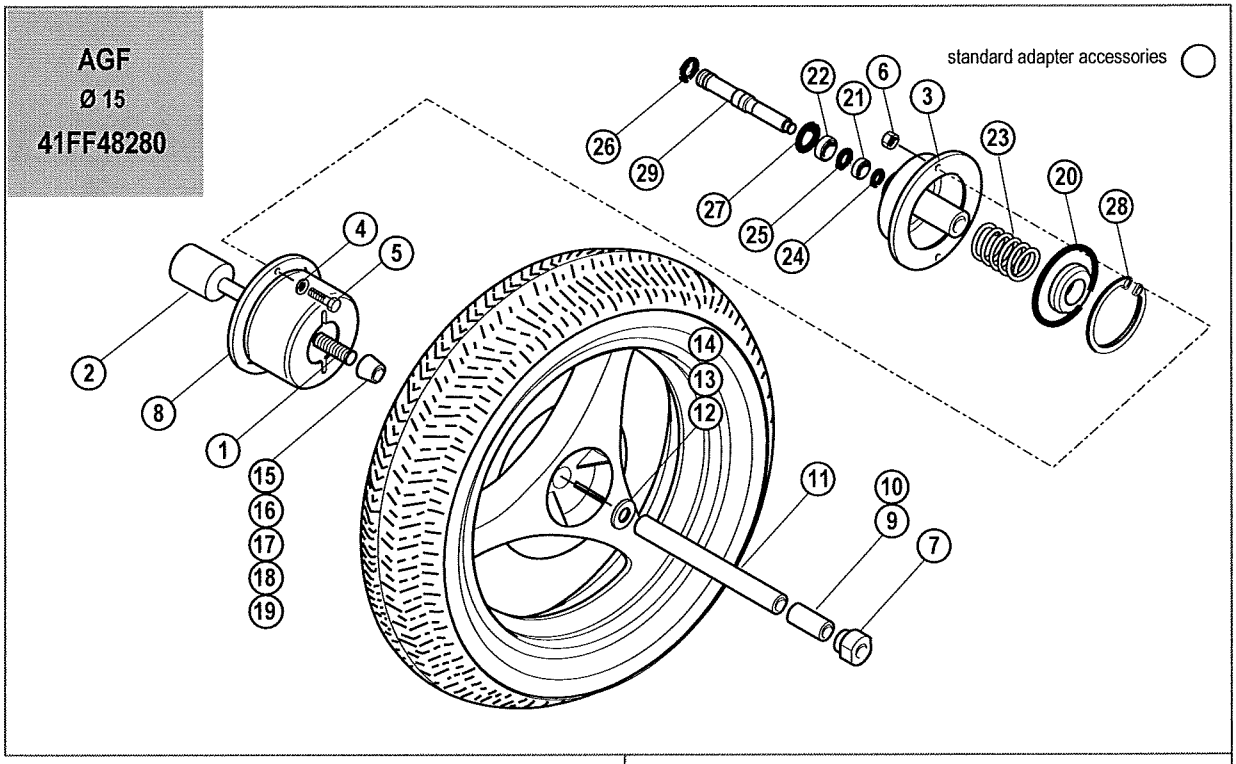

GENERAL FEATURES :

- Only tool for all flanged wheels (i.e. Aprilia, Bmw, Ducati, Guzzi, Harley, Honda, etc.).
- Centering up to Ø 68 mm.
- The cone (15÷19) is pushed onto wheel centering area by adaptor spring is available (**CEMB patent**).

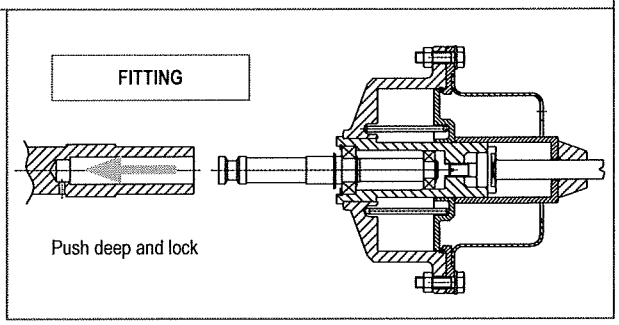

ITEM	CODE	Q.ty	DESCRIPTION	
1	40FF29925	1	shaft	Ø 15 L=231
2	40FF48244	1	spring pusher	Ø 15 (Ø 40)
3	40FF48281	1	complete flanged bracket	
4	325035008	2	flat washers	8,4x17 UNI 6592
5	311120096	2	screws	TE M8x30 EN 24014
6	321232008	2	nuts	M8 EN 24032
7	40FF29950	1	lockring	Ø 15
8	40FF29943	1	counterflange	
9	40FF29931	1	spacer	Ø 15 L=20
10	40FF29932	1	spacer	Ø 15 L=40
11	40FF31377	1	spacer	Ø 15 L=95
12	40FF31376	1	disc	Ø 15 x 45
13	40FF31649	1	disc	Ø 15 x 64
14	325035014	1	washer	Ø 15 x 28

ITEM	CODE	Q.TY	DESCRIPTION	
15	40FF29927	1	cone **C1** Ø 15-25	
16	40FF51119	1	cone **C2** Ø 25-30	Yamaha R1-R6
17	40FF29929	1	cone **C3** Ø 30-40	BMW
18	40FF31650	1	cone **C4** Ø 40-60	Aprilia AF1, Honda NTV, Ducati 916
19	40FF29944	1	cone **C5** Ø 54-68	Honda VFR, Yamaha GTS 1000
20	42FP41056	1	spring cup Ø 40	
21	020600103	1	bearing Ø12/28x8	6001-2Z
22	020600303	1	bearing Ø17/35x10	6003-2Z
23	181198630	1	spring	
24	311000012	1	elastic ring Ø 12-E	UNI7435
25	341000017	1	elastic ring Ø 17-E	UNI7435
26	341000020	1	elastic ring Ø 20-E	UNI7435
27	342000035	1	elastic ring Ø 35-I	UNI7437
28	344200118	1	elastic ring SB 118	
29	40FF48284	1	shaft for flanged connection (3)	

FITTING

Some example for flanged wheels.

APRILIA AF1

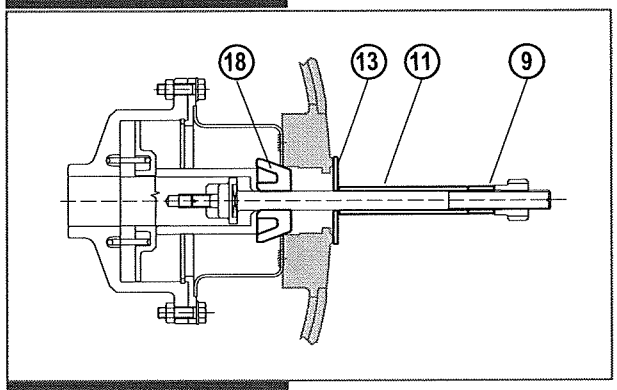

BMW K-R

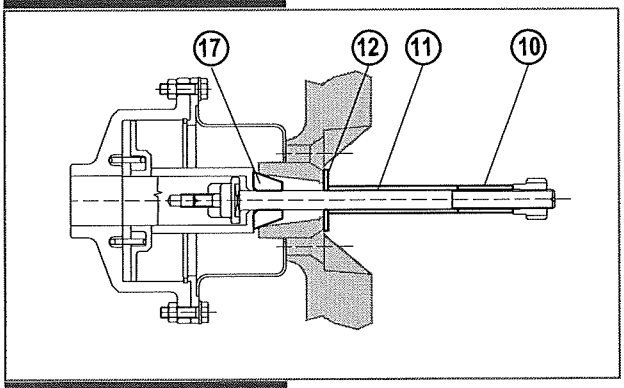

DUCATI 916

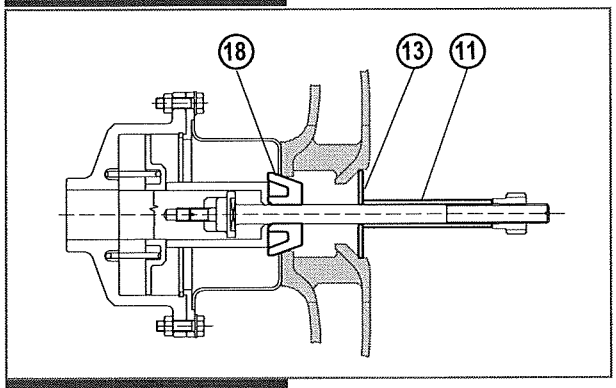

YAMAHA GTS 1000

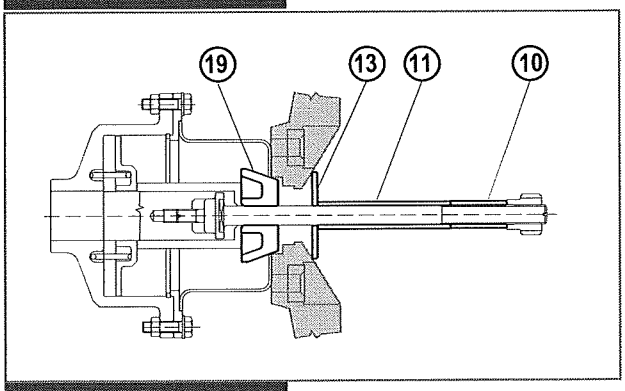

EXAGON front wheel

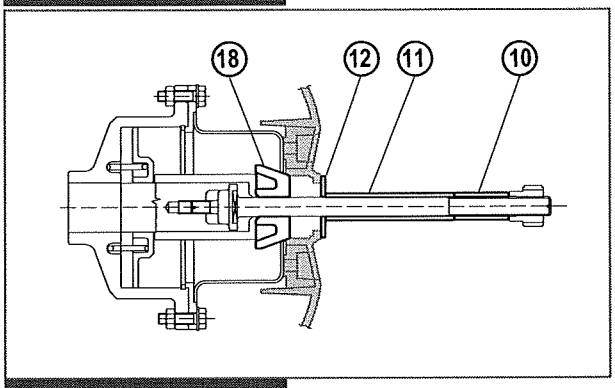

EXAGON rear wheel

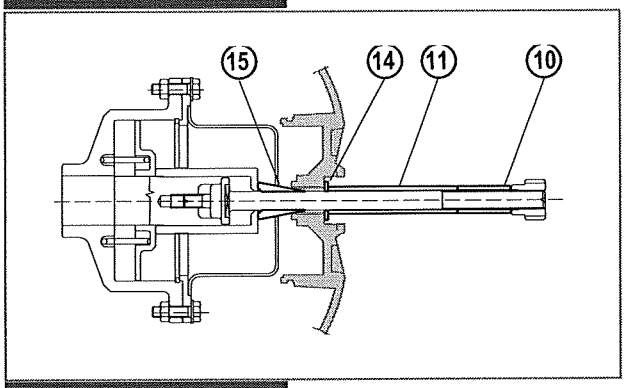

HONDA NTV

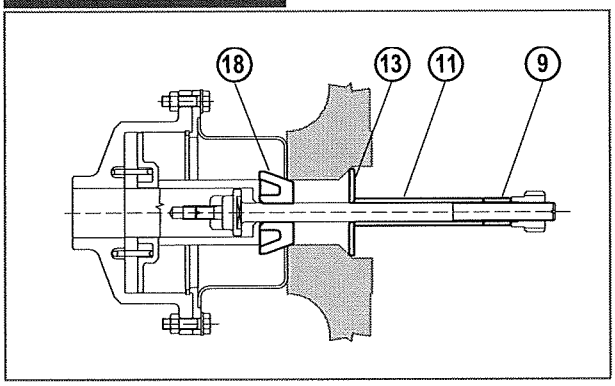

HONDA VFR

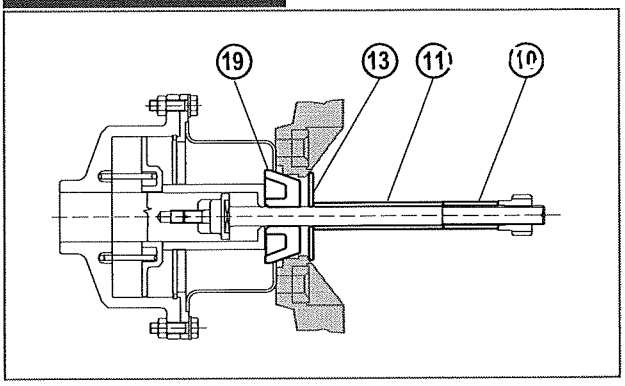

C22 Bike  Tool for motorcycle wheels on bearings AF15

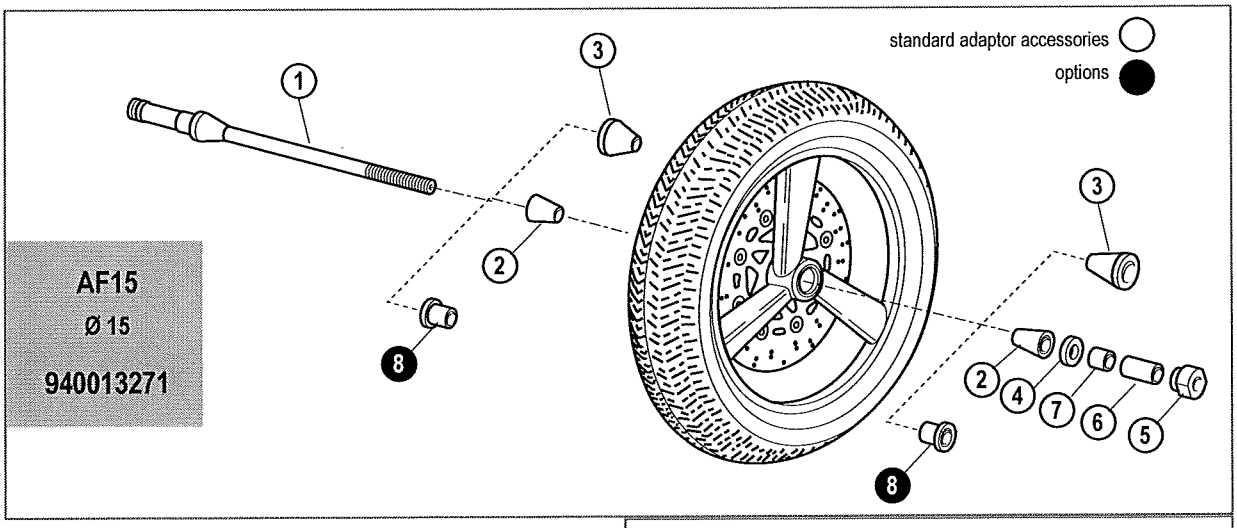

GENERAL FEATURES :
• Tool for motorcycle wheels fitted on bearings with central hole.

FITTING

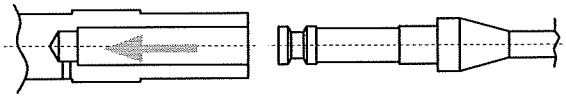

Push deep and lock

ITEM	CODE	Q.ty	DESCRIPTION	
1	940013260	1	shaft	Ø 15 L=290
2	40FF29927	2	cone **C1**	Ø 15-25
3	424116877	2	cone	Ø 15-35
4	325035014	1	washer	Ø 15 x 28
5	40FF29950	1	lockring	Ø 15
6	40FF29932	1	spacer	Ø 15 L=40
7	40FF29931	1	spacer	Ø 15 L=20

ITEM	CODE	Q.ty	DESCRIPTION		
8	41FF51299	1	COMPLETE KIT OF CENTERING BUSHES		
	40FF31651	2	**B1** L=30	Ø 28	Yamaha
	40FF38838	2	**B2** L=30	Ø 25	Kawasaki
	40FF38837	2	**B3** L=30	Ø 22	Yamaha, Honda, Aprilia, Gilera, Kawasaki, Suzuki
	40FF38836	2	**B4** L=30	Ø 20	Yamaha, Honda, Aprilia, BMW, Triumph, Kawasaki, Suzuki, Laverda, Moto Guzzi, KTM
	40FF38835	2	**B5** L=25	Ø 17	Yamaha, Suzuki, KTM
	40FF38834	2	**B6** L=20	Ø 16	Moto Guzzi
	40FF38833	2	**B7** L=20	Ø 15	Yamaha, Honda, Aprilia, Gilera, Kawasaki, Suzuki
	40FF49378	2	**B8** L=25	Ø 19,05	Harley Davidson

Tool for motorcycle wheels on bearings AF12 C22 Bike

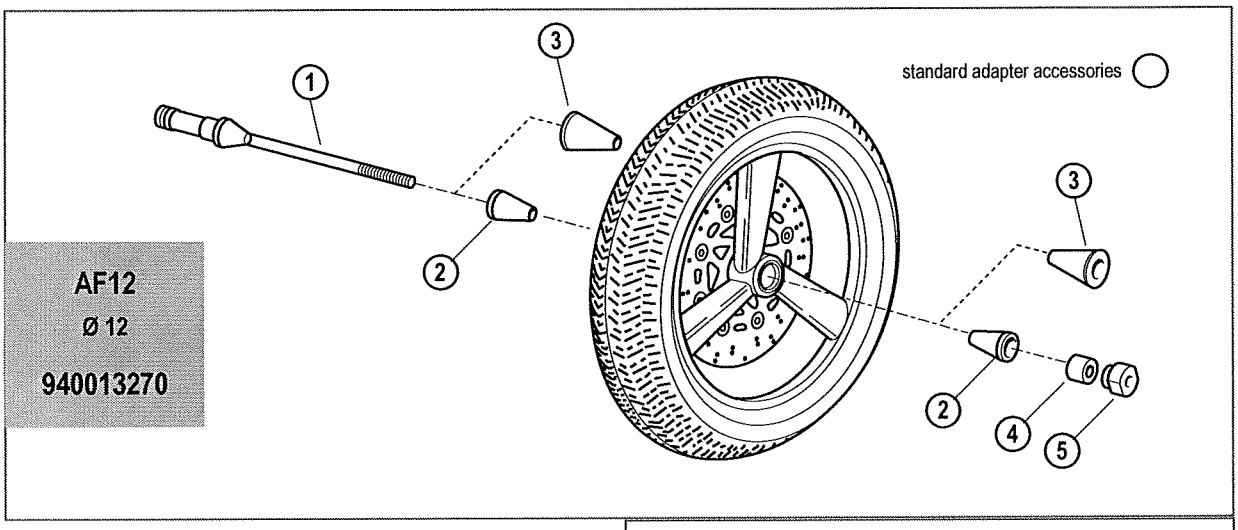

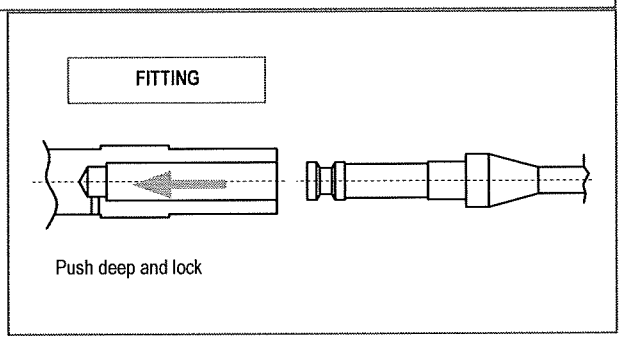

GENERAL FEATURES :
• Tool for motorcycle wheels fitted on bearings with central hole.

ITEM	CODE	Q.ty	DESCRIPTION	
1	940013259	1	shaft	Ø 12 L=200
2	940013561	2	cone	Ø 12-25
3	424216877	2	cone	Ø 12-35
4	424119873	1	spacer	Ø 12 L=20
5	424119872	1	lockring	Ø 12

C 22 Bike (C) - C 22 Bike HS (B1)

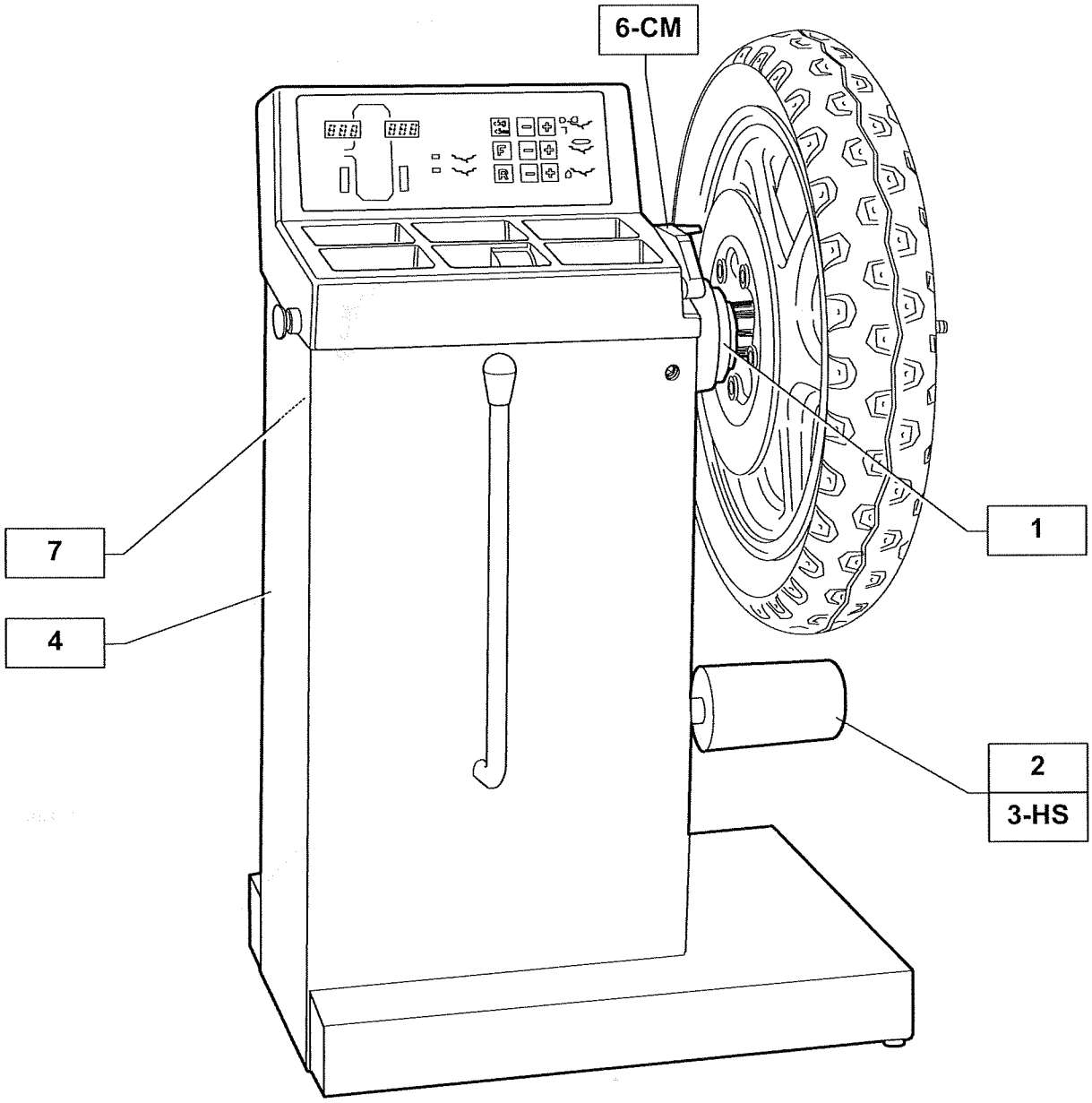

D0189-1	0189-1	1	MANDRINO	SHAFT ASSEMBLY
D0189-2	0366-2	2	MOTORE+DATORE DI FASE+ TRASDUTTORI PIEZO	MOTOR+POSITION PICK-UP+ PIEZO TRANSDUCER
D0189-3-HS	0189-3	3-HS	FRENO (solo per C22 Bike HS)	BRAKE (C22 Bike HS only)
D0189-4	0189-4	4	BASAMENTO (1)	CASING (1)
D0189-6-CM	0189-6	6-CM	CALIBRO DISTANZA (MANUALE)	DISTANCE GAUGE (MANUAL)
D0189-7	0189-7	7	POTENZA	POWER UNIT

* Particolari reperibili in commercio

* Parts on the market

C 22 Bike (C) - C 22 Bike HS (B1)

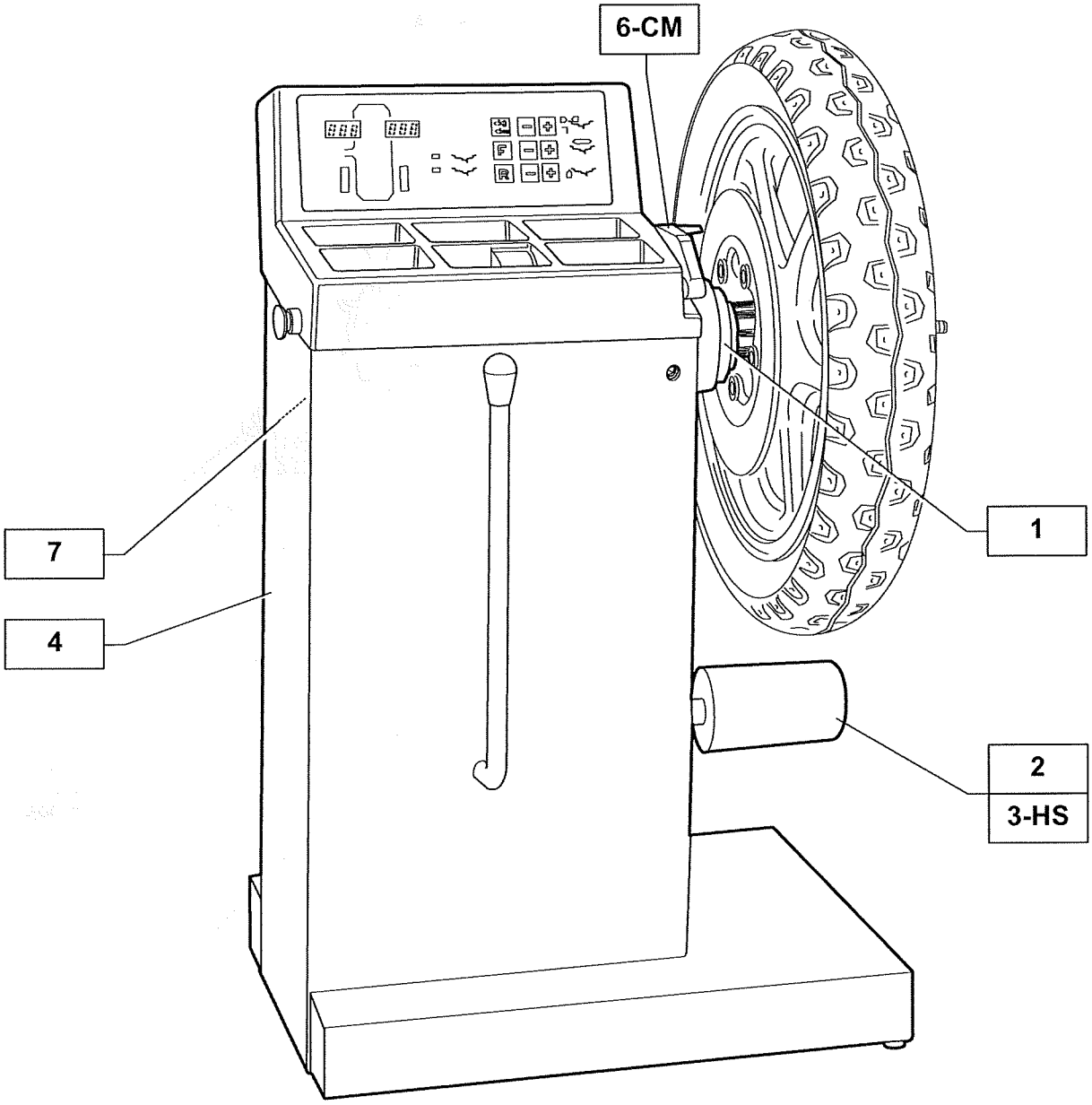

D0189-1	0189-1	1	DORN	BROCHE	MANDRIL
D0189-2	0366-2	2	MOTOR+PHASENGEBER+ PIEZOGEBER	MOTEUR+DONNEUR DE PHASE+ TRANSDUCTEURS PIEZO	MOTOR+CAPTADOR DE FASE+ TRANSDUCTORES PIEZOELECTRICOS
D0189-3-HS	0189-3	3-HS	BREMSE (nur für C22 Bike HS)	FREIN (seulement pour C22 Bike HS)	FRENO (sólo para C22 Bike HS)
D0189-4	0189-4	4	SOCKEL (1)	BASE (1)	BASE (1)
D0189-6-CM	0189-6	6-CM	ABSTAND MESSLEHRE (MANUELL)	CALIBRE DISTANCE (MANUEL)	CALIBRE DISTANCIA (MANUAL)
D0189-7	0189-7	7	NETZEINHEIT	PUISSANCE	POTENCIA

* Handelsübliche Teile * Pièces se trouvant dans le commerce * Piezas que se encuentran en el mercado

1

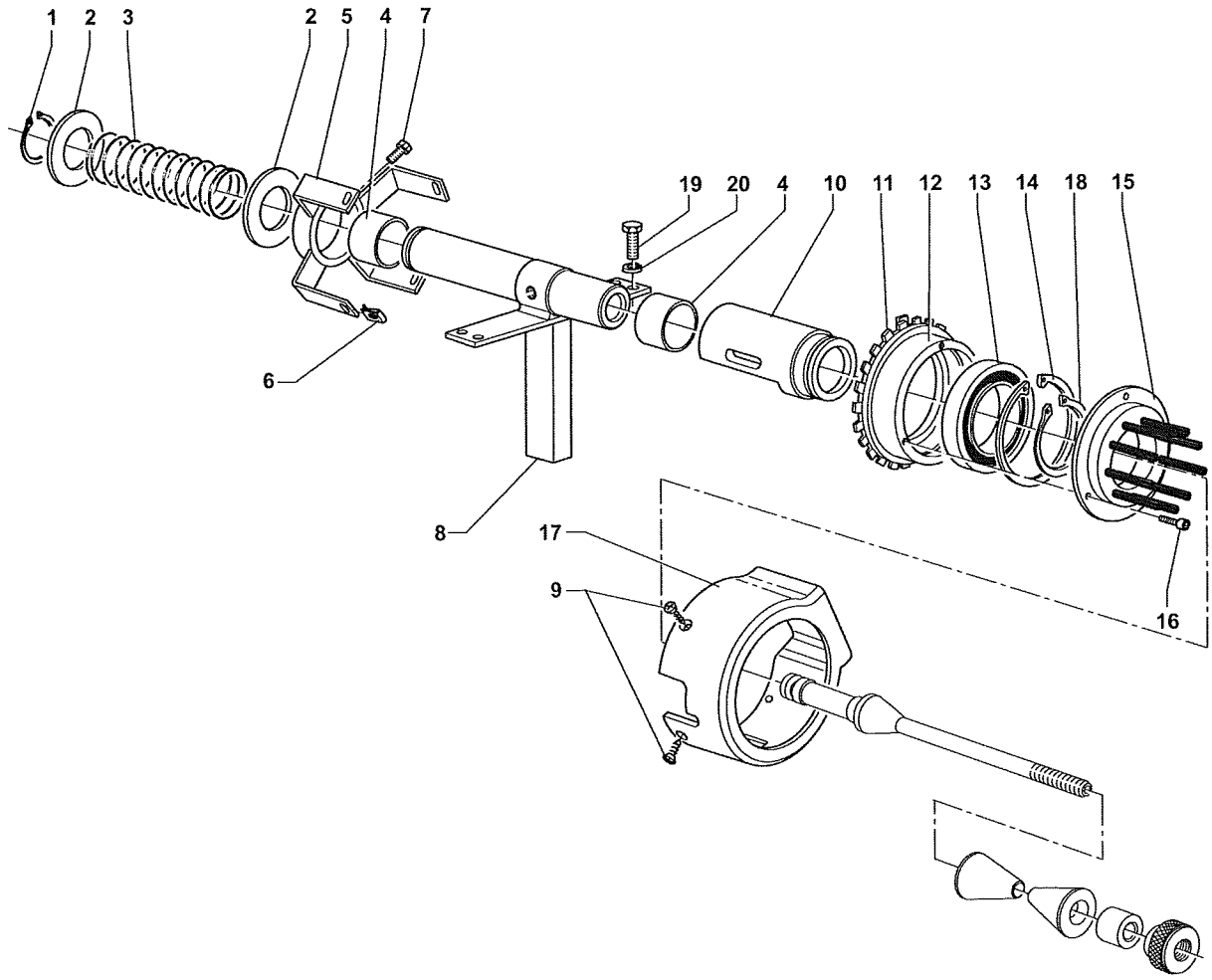

N.	CODE	DATA	N.	CODE	DATA	N.	CODE	DATA
1	341000035	*	11	420720037				
2	325035035	*	12	420424793				
3	181247860		13	020601003	*			
4	036003530	*	14	342000080	*			
5	420324794		15	940013515				
6	329007043	*	16	314232034	*			
7	311220069	*	17	140247801				
8	420324784		18	341000050	*			
9	315931069	*	19	311220091	*			
10	420324796		20	325046008	*			

2

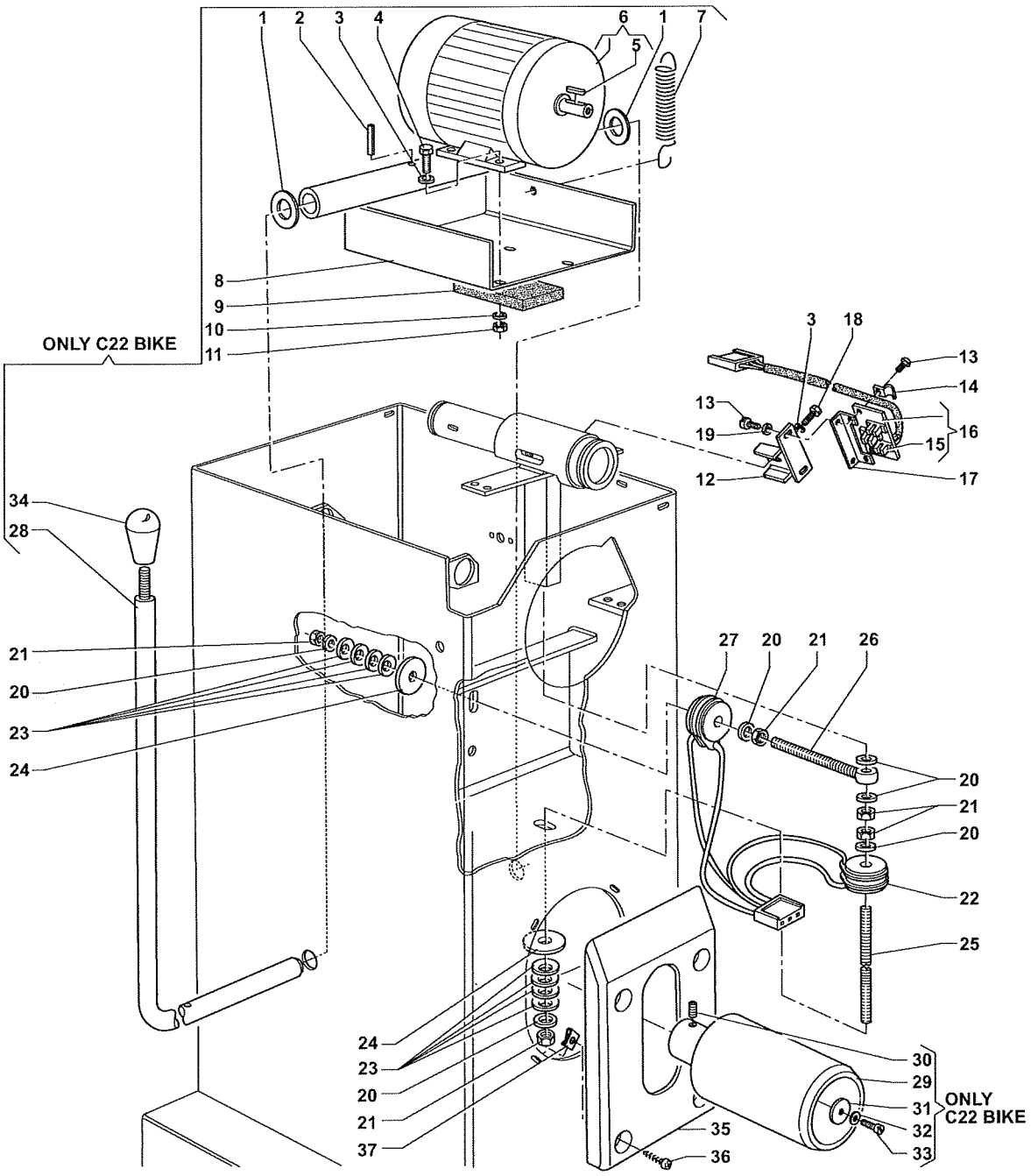

N.	CODE	DATA	N.	CODE	DATA	N.	CODE	DATA
1	325035020	*	13	314231018	*	26	105114744	
2	335310075	*	14	420610639		27	940701233	
3	325035006	*	15	547000370		28	420324785	
4	311220072	*	16	940513825	ONLY C22 BIKE	29	07FG61665	
5	348025020	*	16	67M19378P	ONLY C22 BIKE HS	30	319216069	*
6	50FG61666	**220V/50 Hz**	17	420724790		31	420424775	
6	50FG61667	**220V/60 Hz**	18	311220071	*	32	325035005	*
6	50FG61668	**110V/60 Hz**	19	325035003	*	33	314231054	*
7	182185730		20	325035010	*	34	321232006	*
8	420324792		21	321212010	*	35	140247811	
9	215100000	*	22	940701232		36	314931071	*
10	325046006	*	23	345122515	*	37	329007043	*
11	321232006	*	24	326035011	*			
12	420724797		25	105110165				

3-HS

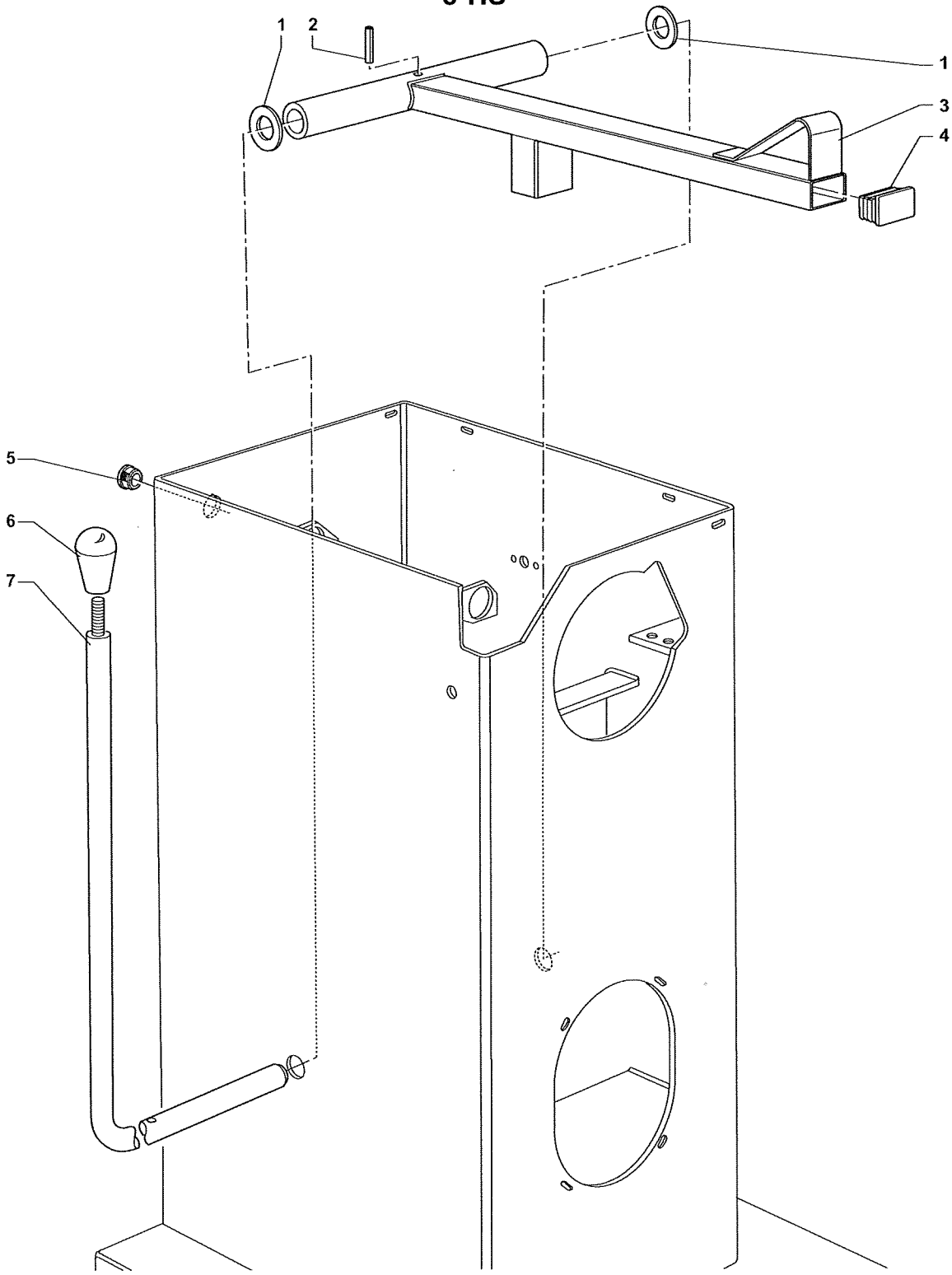

N.	CODE	DATA	N.	CODE	DATA	N.	CODE	DATA
1	325035020	*						
2	335310075	*						
3	42FB52111							
4	213024020	*						
5	213008753	*						
6	321232006	*						
7	420324785							

4

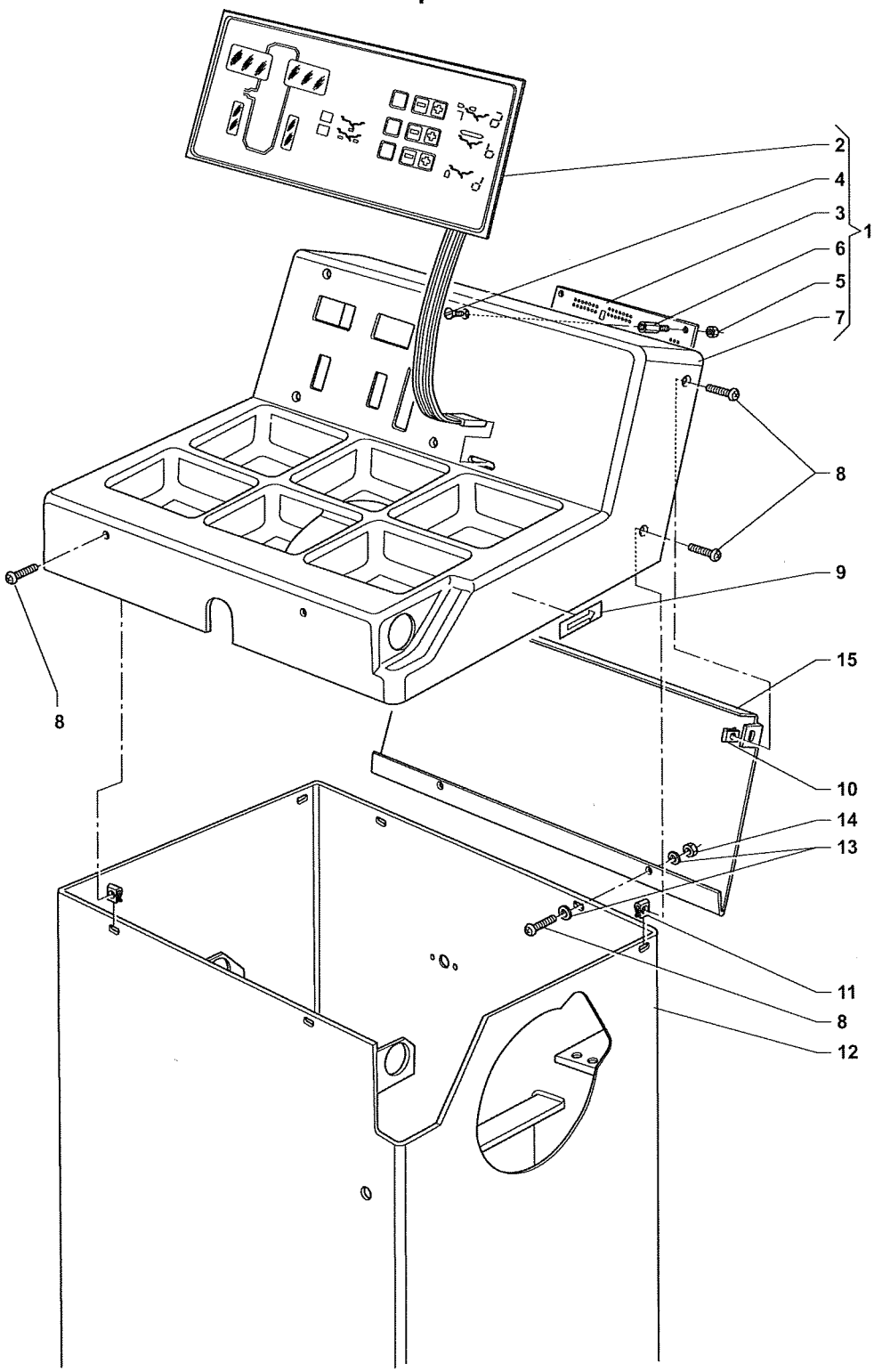

N.	CODE	DATA	N.	CODE	DATA	N.	CODE	DATA
1	86PR53696	**ONLY CEMB**	9	040010101				
1	86PR53698	**ONLY M.T.**	10	329007041	*			
2	050135103	**ONLY CEMB**	11	329007043	*			
2	05PR52838	**ONLY M.T.**	12	42BV24779				
3	940513300		13	325035004	*			
4	315231015	*	14	321232004	*			
5	321232003	*	15	420224453				
6	527034980	*						
7	143247951							
8	317232034	*						

6-CM

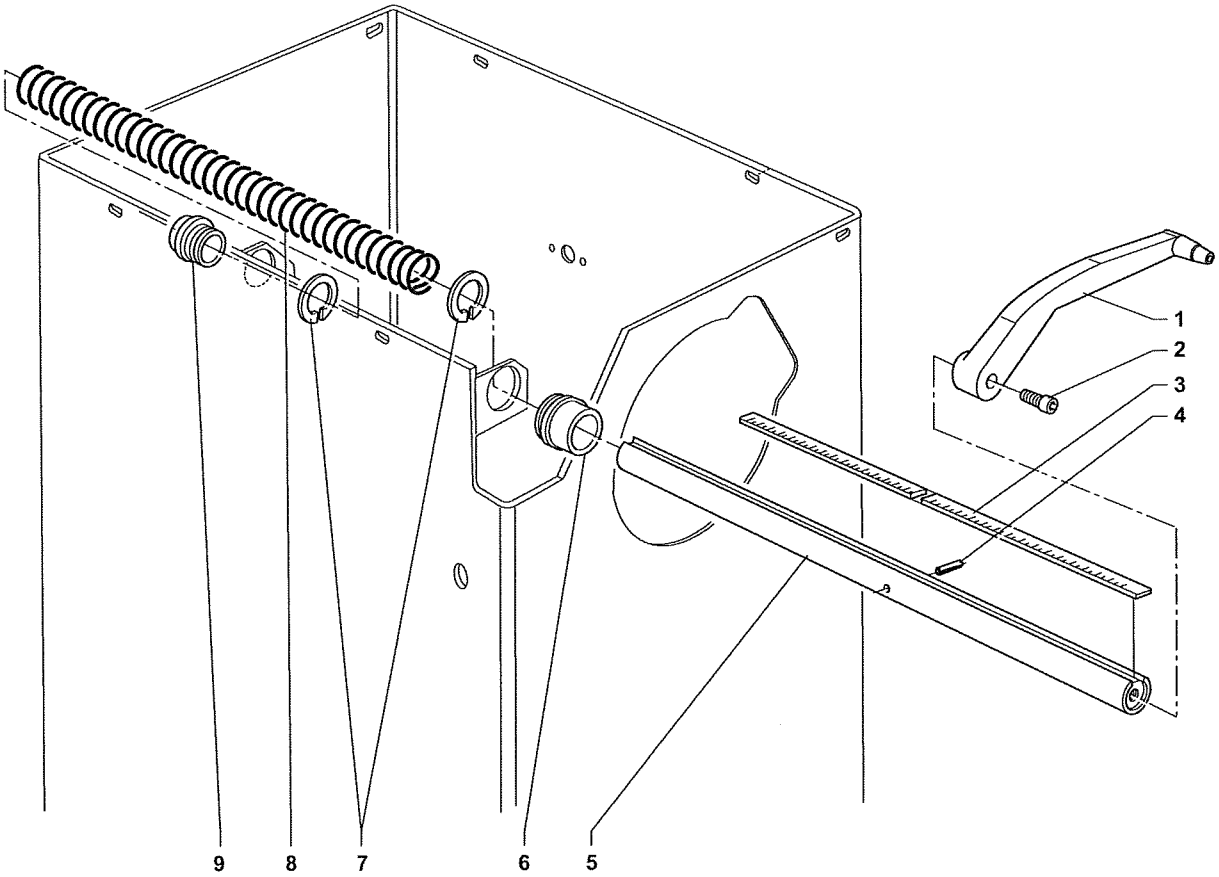

N.	CODE	DATA	N.	CODE	DATA	N.	CODE	DATA
1	21FC47315							
2	312120071	*						
3	040142902							
4	335310040	*						
5	420524622							
6	217019284							
7	344100300	*						
8	181192870							
9	217019283							

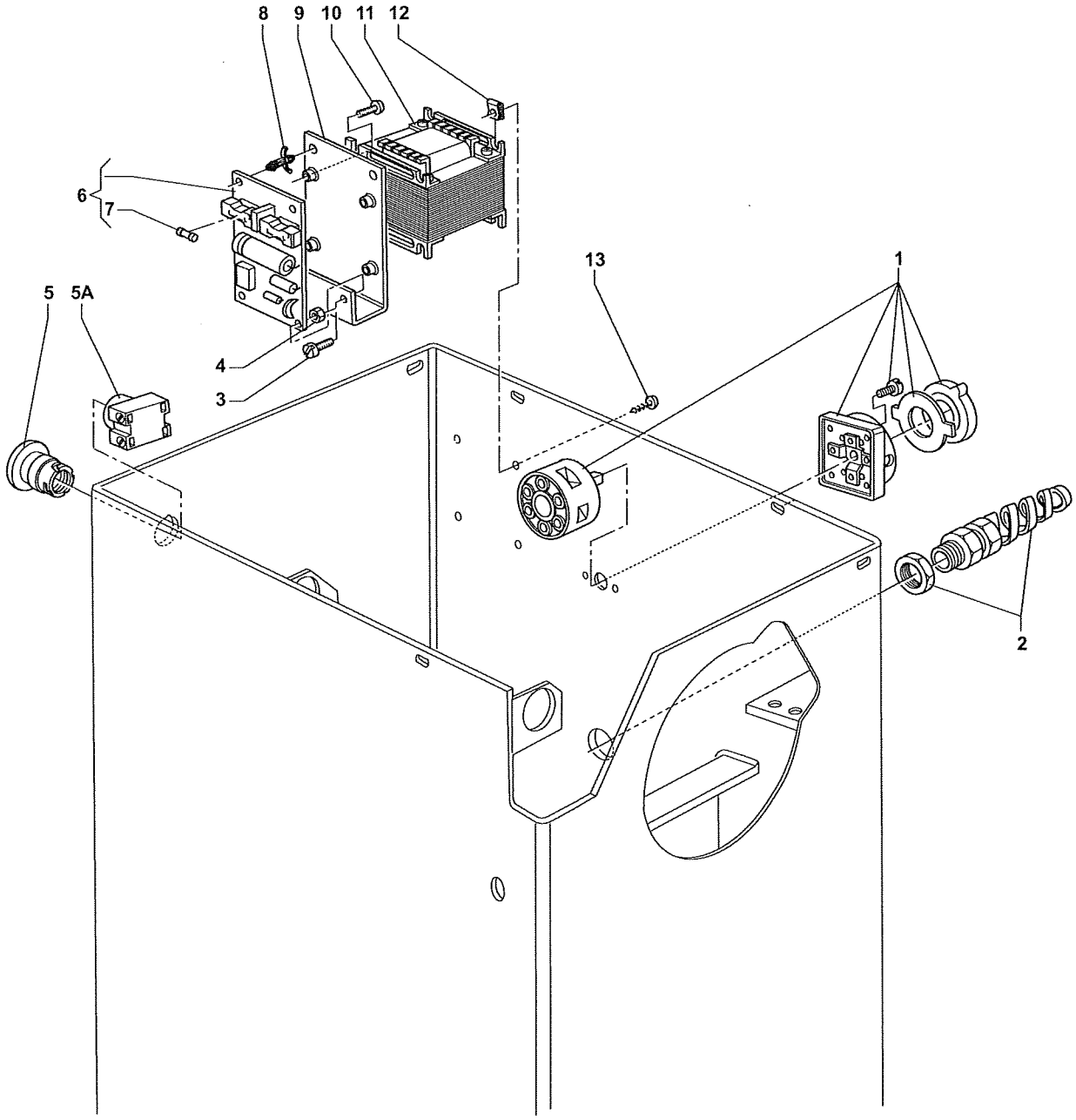

N.	CODE	DATA	N.	CODE	DATA	N.	CODE	DATA
1	511231002		10	314232034	*			
2	526003243	*	11	611018463				
3	314231018	*	12	329007041	*			
4	321232003	*	13	314931069	*			
5	530080353							
5A	530080011							
6	940512124							
7	681002000	*						
8	527006175	*						
9	420619747							

Index

Page

1 - Changing power supply voltage

- Always check the power supply voltage marked by the manufacturer on the characteristics plate.

- Standard supply is 220 - 240 V / 50 Hz monophase.

- To convert to 110 V, remove the red cable "A" and replace it with the white cable "B".

- Replace the motor according to the voltage and frequency of the mains used:

  - 220/50
  - 220/60
  - 110/60

1

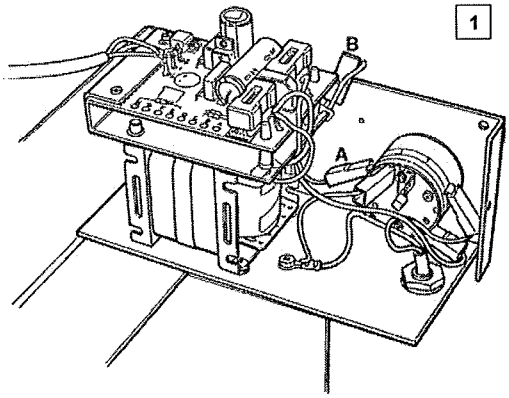

ARRANGEMENT NOT TRUE

2 - Selecting of machine parameters

Press **[<5]** + **[R]** as though you were going to run the self-calibrating facility. When the position LEDs stop flashing, instead of running the cycle, press the following within 5 seconds and in the right sequence:
[-a] then [+a] then [F]
- After you have pressed **[-a]** and **[+a]**, the displays will go off; after you have pressed **[F]**, the current value of the fixed distance **[DF]** will be displayed: use **[+b]** and **[-b]** to alter it.
- Press **[+a]** to pass to changing the **" I "** value.
The right hand display will read the current value (as a %) and the left hand display the lettering **"in."** and the symbol **" - "** if the correction is negative, or " _/ " if it is positive. Use **[+b]** and **[-b]** to alter it.
- Press **[+a]** again. The right hand display will read the "S" value. Use **[+b]** and **[-b]** to alter it.
- Press **[+a]** to terminate setting.

N.B.: If you press the **[<5]** key at any stage while setting these three parameters, the system will interrupt the function and automatically set the machine parameters to the base values.

Basic configuration values: **C22 bike: DF = 85** **I = +6** **S = 330**

After altering the machine parameters, you should run its self-calibration facility again.
N.B.: A plate inside the machine shows the values of the calibration done in the factory.

3 - Checking the distance gauge

2

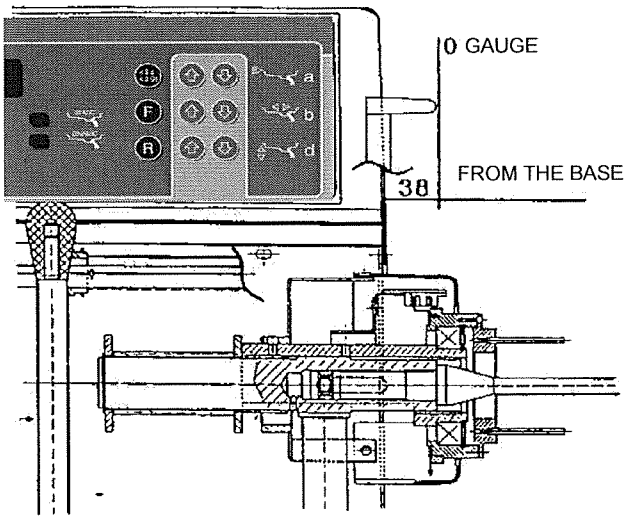

There is no adjustment on the distance gauge. The only time you have to be careful is when you change the graduated strip.
This must be positioned so that it reads 0 at the end of the fixed index (white ferrule) when the rider tip is situated in the position shown in Figure 2.

4 - Checking the position sensor

3

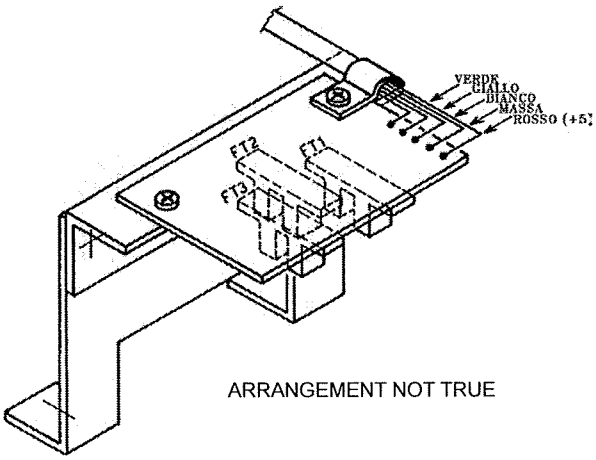

Follow these instructions to check the efficiency of the position sensor:

1. Make sure that none of the three opto-couplers rubs against the phase disc or against the RESET tooth.
2. Check the following voltages, using a tester set for VDC measuring (the power supply should be on but the machine should not be turning):

* +5 VDC constant between earth and the red wire
* +4.5 to 4.8 VDC between earth and the yellow (RESET) wire when the RESET tooth is in the opto-coupler TC ST2000 and "0" VDC when the RESET tooth is out of the opto-coupler.
* "0" VDC to 4.5 / 4.8 VDC voltage variations between earth and the green wire (CLOCK) and between earth and the white wire (U/D) when the machine shaft is turned very slowly.

N.B.: if you have to replace the position sensor, take off the board only by loosening the two fixing screws, but do not move the supporting bracket; this makes repositioning easier.

5 - Fitting the piezo pick ups

4

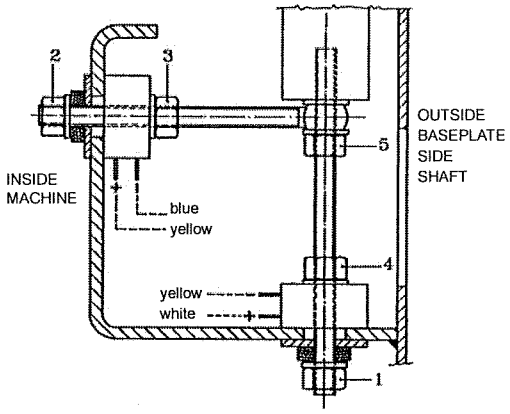

HOW TO FIT THE PIEZO PICK-UPS

Compensation or angular position problems may sometimes be caused by a fault in the piezo pick-ups. Follow these instructions to replace them:

1. Remove the weights tray.
2. Remove nuts 1 and 2 with pertaining springs and washers.
3. Loosen nuts 3, 4 and 5 and detach the various parts.
4. Re-fit the new parts without tightening the nuts, observing the correct fitting sequence.

N.B.: the position of the coloured wires shown in the picture must be respected when fitting piezo pick-ups.

5. Use a wrench to tighten nut 5; nuts 3 and 4 can be tightened by hand (1/2 a turn with a wrench if necessary). The mandrel shaft should be kept perfectly in line during these operations.
6. Re-fit the springs and nuts 1 and 2, which must be tightened completely, in order to recover the springs' elasticity, and then loosened half a turn, thus giving the piezo parts the correct load (you can use a torque wrench calibrated for 400 Kg.cm).
7. Smear a plentiful layer of silicone on the piezo parts. (***N.B.:*** the piezo crystals must have an insulation of at least 50 Mohm to function properly).
8. Re-fit the cover and the weights tray.

6 - Trouble shooting flow chart

N.B.: if you disconnect the CN5 (computer board) from the MOTOR [START] key, the instrumentation will also function with a manual spin. If you replace the computer board, set the machine parameters indicated on the technical characteristics plate.

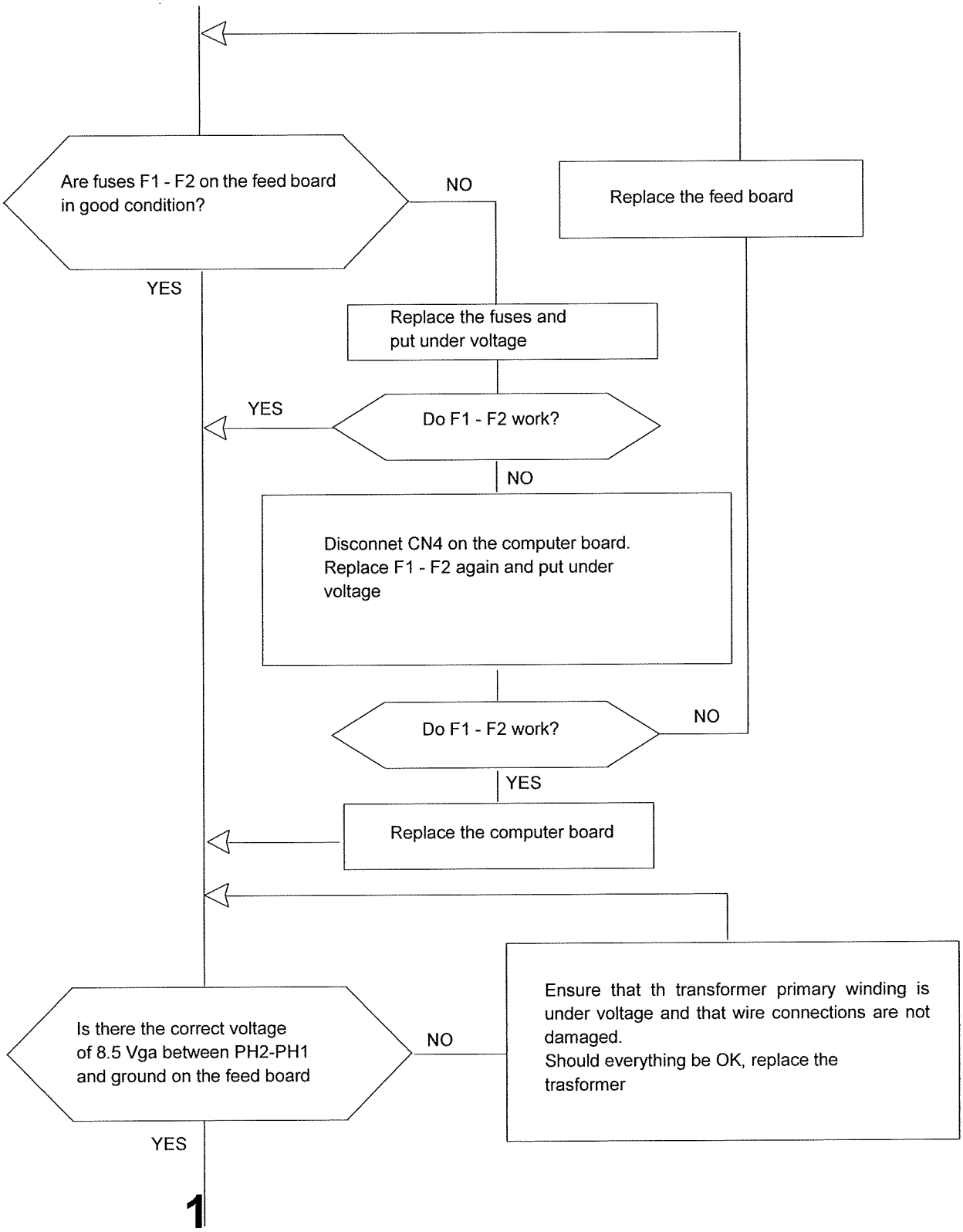

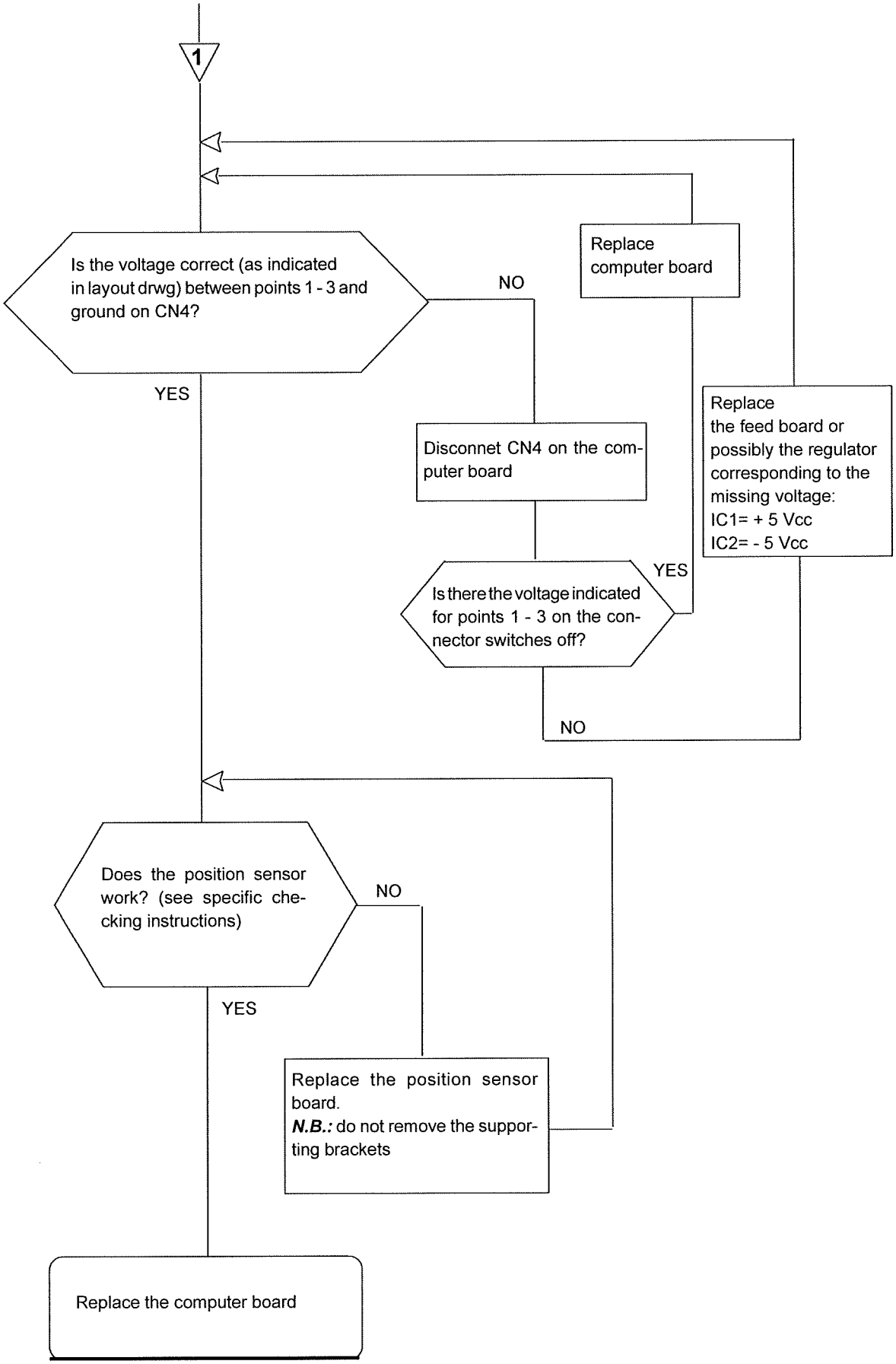
1
Is the voltage correct (as indicated in layout drwg) between points 1 - 3 and ground on CN4?
NO
YES
Replace computer board
Disconnet CN4 on the computer board
Is there the voltage indicated for points 1 - 3 on the connector switches off?
YES
NO
Replace the feed board or possibly the regulator corresponding to the missing voltage:
IC1= + 5 Vcc
IC2= - 5 Vcc
Does the position sensor work? (see specific checking instructions)
NO
YES
Replace the position sensor board.
N.B.: do not remove the supporting brackets
Replace the computer board

6.1- Checking and calibrating static value (STI)

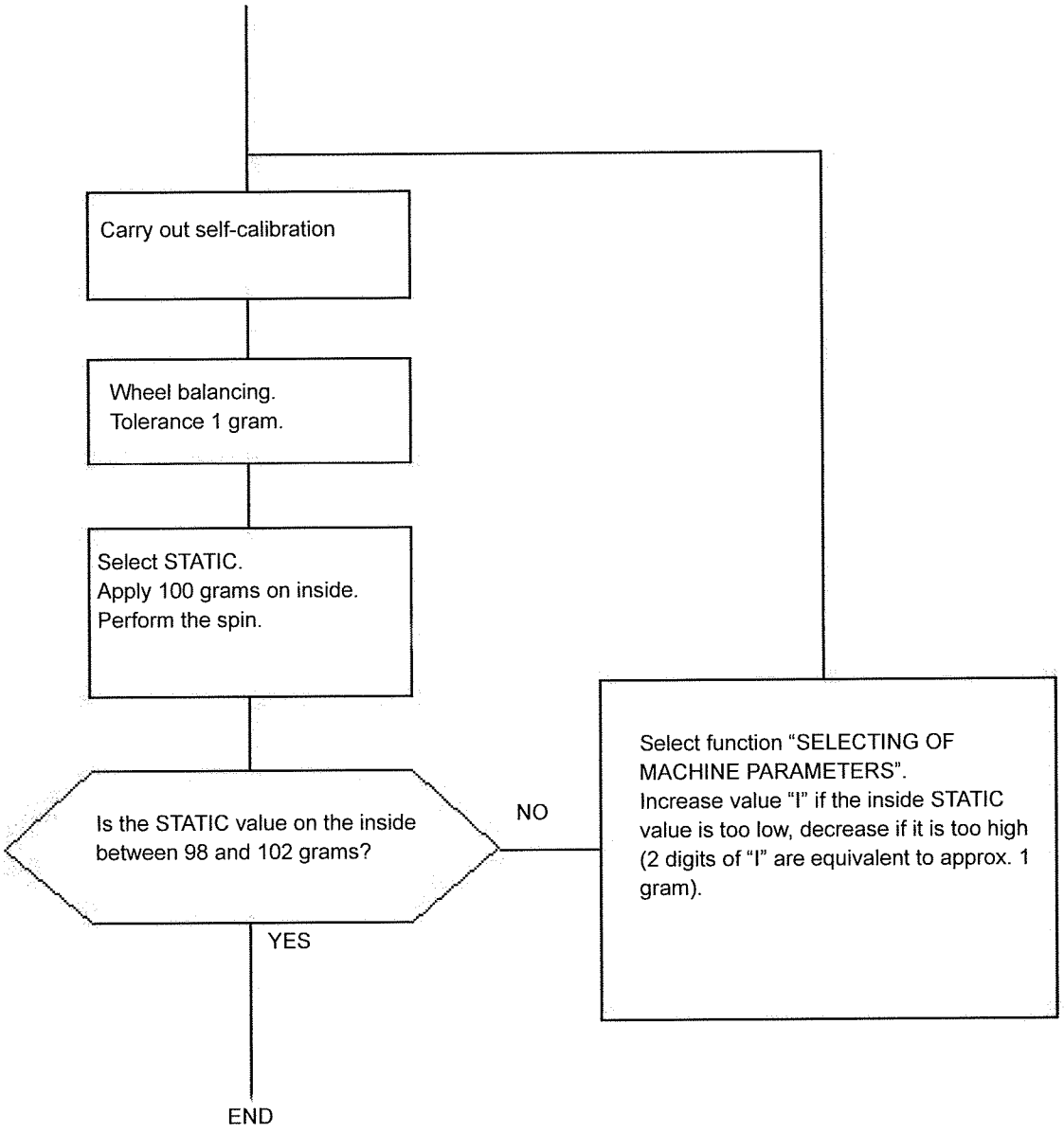

6.2 - Checking and calibrating unbalance position

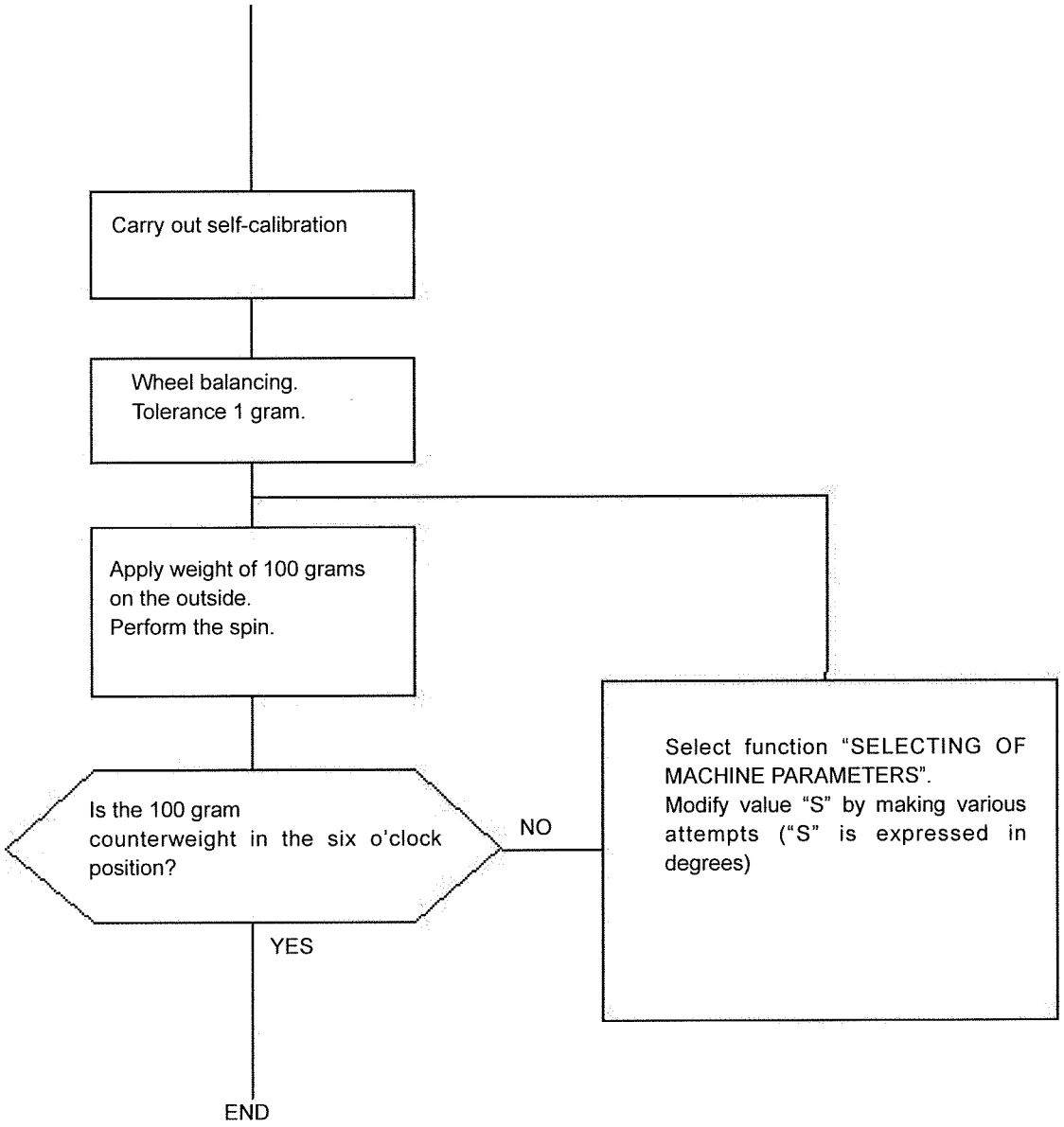

6.3 - Checking and calibration of fixed distance value (DF)
(Perform with car wheel of average size)

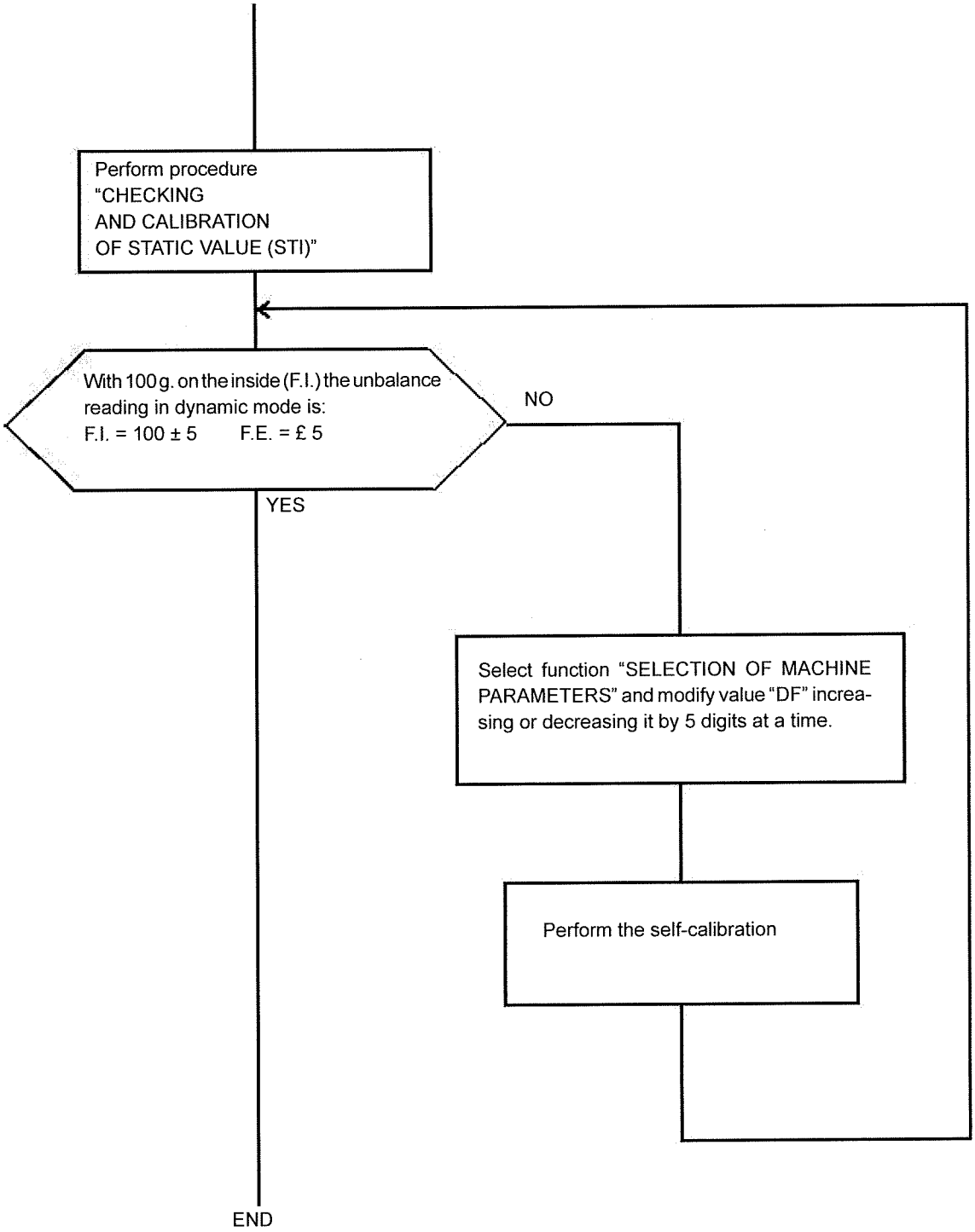

7 - Computer pcb layout

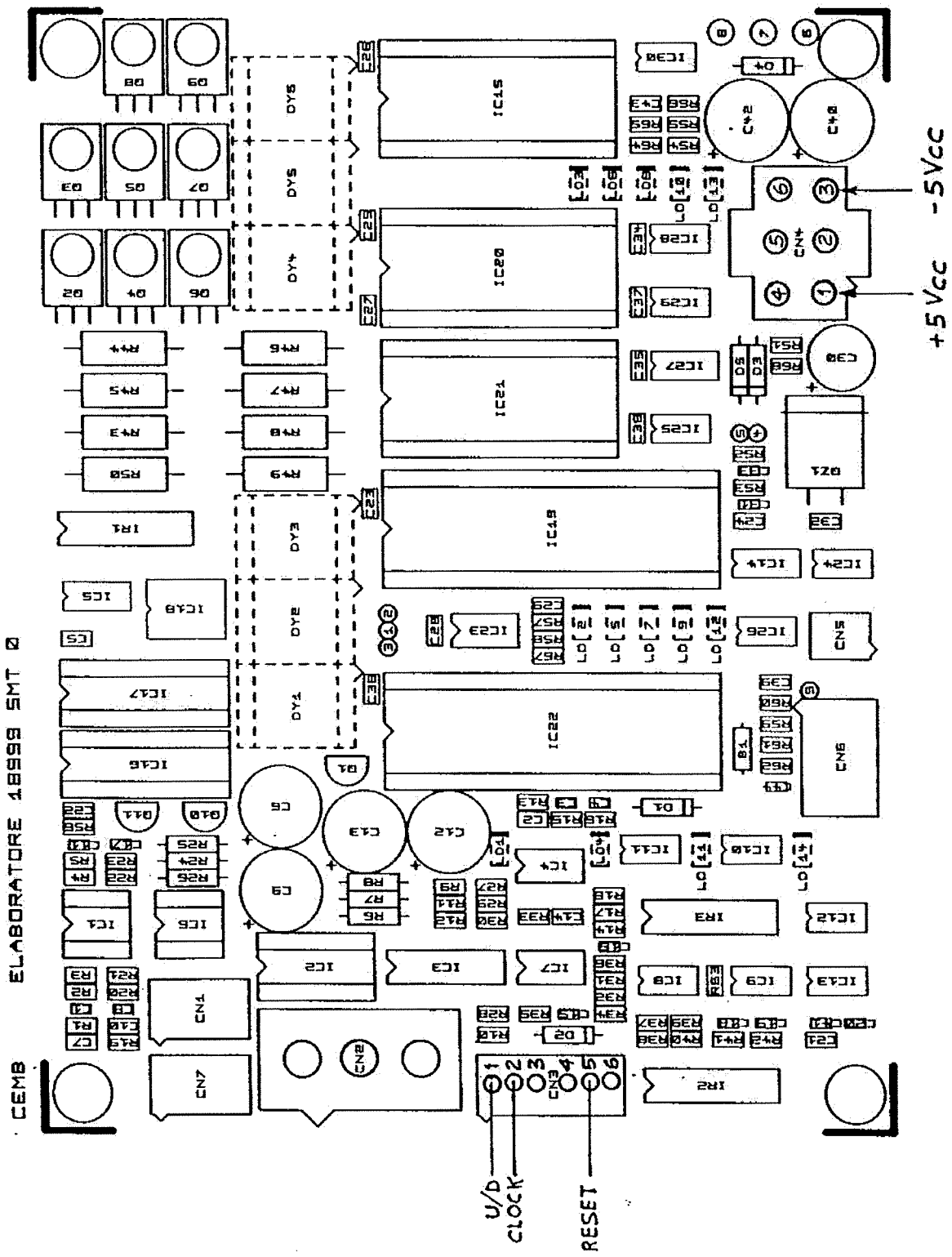

Manuale: 366

Schemi elettrici - Sm

S/P/O	Q.tà	Descrizione		Codice	File PDF	Link
		Schema a blocchi			S6165100I	PDF

Serie	1	Potenza		940603137	S3265300I	PDF
		Scheda alimentatore			940512124	
	1	Kit start motore		86SB48359	S4835900I	PDF

Serie	1	Pannello		940503299	S5291100I	PDF
		Elaboratore	940513300		S4836000I	PDF
		Scheda elaboratore			670189995	

Serie	1	Cavo rilevatori		940702255	S3119400I	PDF

Serie	1	Datore di fase		940603296	S4836100I	PDF
		Scheda datore di fase			940513825	

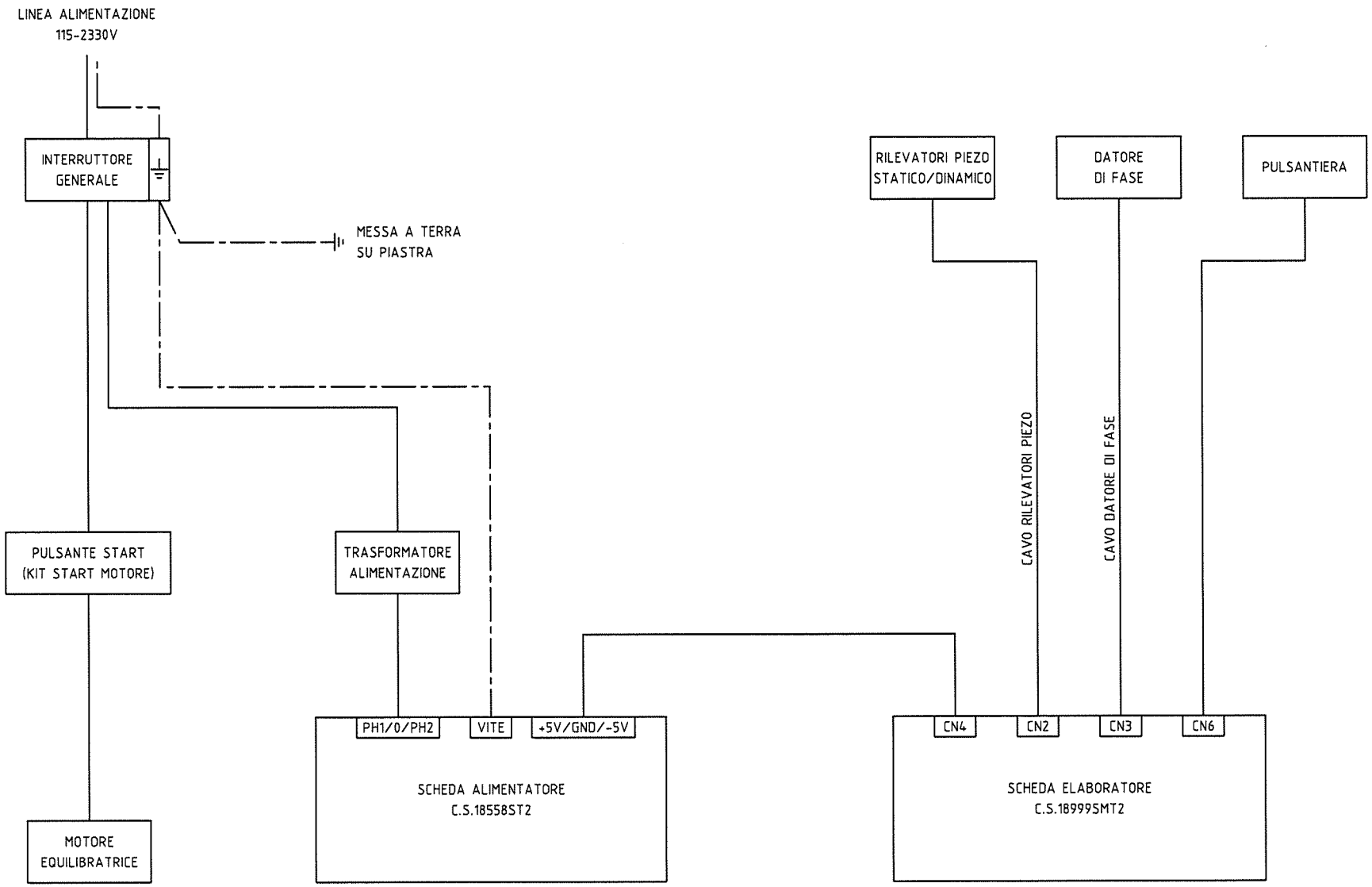

Data:	25/09/2003	Codice:	N° dis.: 61651P	Schema a blocchi	Foglio 1
Disegnatore:	CIAPPESONI			Schema elettrico	di 1
Normativa:	IEC 750				

SPECIFICHE SCHEMI ELETTRICI E SCHEDE ELETTRONICHE

Descrizione Potenza rete 115-230V

Gruppo Potenza rete/batteria

Codice 940603137 **Rev. 11** **File PDF S3265300I** Schema elettrico 32653P

Codice mecc. 46SZ32592 Macchina riferimento HB101(A)

SPECIFICHE E NOTE DI MONTAGGIO

Non collegare il cavo W1 all'interruttore generale S1, verrà collegato durante il montaggio della macchina.
Montare il pressacavo sul cavo W1

REVISIONI SCHEMI ELETTRICI E SCHEDE ELETTRONICHE

Descrizione Potenza rete 115-230V

Gruppo Potenza rete/batteria

Codice 940603137 **File PDF S3265300I** Schema elettrico 32653P

Codice mecc. 46SZ32592 Macchina riferimento HB101(A)

Revisione	Data	Nome	Note revisione
REV00	03/04/96	CIAPPESONI	Emissione
REV01	17/07/97	CIAPPESONI	Materiale inserito: cod.529012636 q.tà 3 faston maschio
REV02	16/01/98	CIAPPESONI	Materiale inserito: cod.651015010 q.tà 0,50m. cavo 1,5mm² giallo/verde cod.653015001 q.tà 3,50m. cavo 3x1,5mm² Materiale eliminato: cod.651010010 q.tà 0,50m. cavo 1mm² giallo/verde cod.653005001 q.tà 3,50m. cavo 3x0,75mm²
REV03	05/06/98	CIAPPESONI	Materiale eliminato: cod.529012636 q.tà 3 faston maschio
REV04	29/07/98	CIAPPESONI	Materiale inserito: cod.523032030 q.tà 2 fascetta cod.529039102 q.tà 1 terminale ke (3) cod.529039103 q.tà 1 terminale ke (4) cod.529035143 q.tà 1 faston M/F Materiale eliminato: cod.522280232 q.tà 3 coprifaston cod.529034158 q.tà 1 terminale ke (3) cod.529034160 q.tà 1 terminale ke (4) cod.529101201 q.tà 3 faston
REV05	29/03/99	CIAPPESONI	Materiale eliminato: cod.526003243 q.tà 1 pressacavo PG11
REV06	22/06/99	CIAPPESONI	Materiale inserito: cod.526003246 q.tà 1 pressacavo PG13,5
REV07	18/07/01	CIAPPESONI	Materiale inserito: cod.651015010 q.tà 0,10m. cavo flex 1,5mm²
REV08	24/09/01	CIAPPESONI	Materiale inserito: cod.529039172 q.tà 1 terminale ke (6) Materiale eliminato: cod.529039103 q.tà 1 terminale ke 39103

REV09	07/02/02	CIAPPESONI	Materiale inserito: cod.653015001 q.tà 0,50m. cavo 3x1,5mm²
REV10	27/08/03	CIAPPESONI	Aggiunta nota di montaggio: il cavo alimentazione non deve essere collegato all'interruttore generale, verrà cablato durante il montaggio macchina. Così facendo si velocizza il montaggio delle macchine.
REV11	25/02/04	CIAPPESONI	Per evitare eventuali problemi di montaggio del pressacavo sul cavo W1, ho posizionato nel modo corretto il pressacavo sullo schema elettrico in modo da visualizzare la posizione di inserimento.

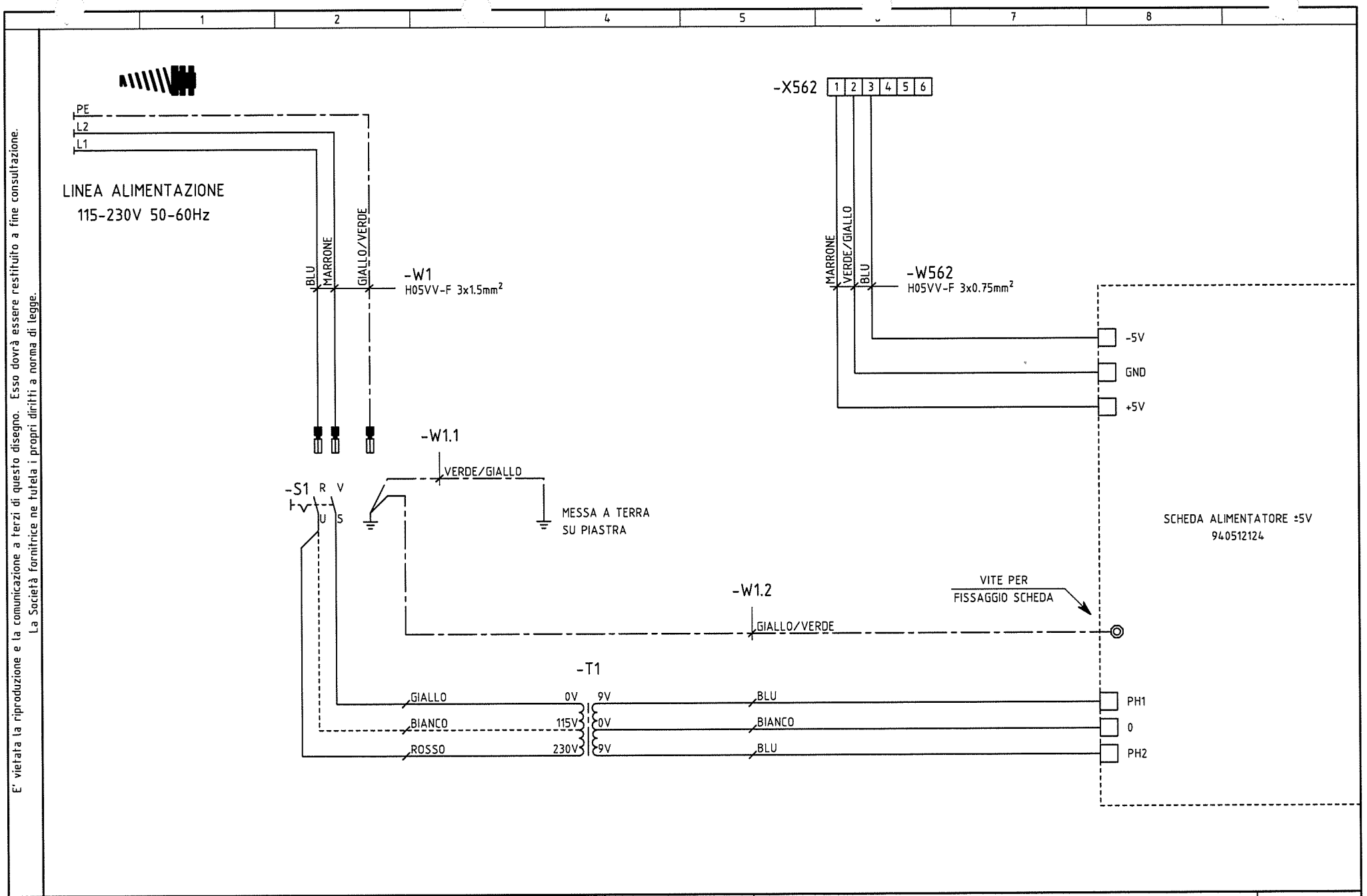

Data: 25.02.2004	Codice: 940603137	N° dis.: 32653P	Piastra di potenza 115-230V	Foglio 1
Disegnatore: CIAPPESONI			Schema elettrico	di 1
Normativa: IEC 750				

LISTA MATERIALE

CODICE: 940603137			DATA: 25.02.2004	
DESCRIZIONE: Potenza 115-230V			SCHEMA ELETTRICO: 32653P	
ID	**RIF.**	**DESCRIZIONE**	**QUANTITA'**	**CODICE**
		MAT. MECCANICO PIASTRA POTENZA C20	1	46SZ32592
		DISTANZ. IN NYLON MM.21 37-1693-1100 (1299)	2	527006175
		SCHEDA ALIMENTATORE P11 - P200 (2124)	1	940512124
-S1		INTERRUTTORE "VM" BIPOLARE KL1002+Q555 (1922)	1	511231002
-T1		COPRIFASTON F. 6,3TR 63N004	3	522280232
-T1		FASCETTA EZ. CIP100/25 TRASP.	2	523032030
-T1		FASTON F. A NASTRO 6,3 010101201	3	529101201
-T1		TRASF.(110/220-9/9) D.18463 P10_11,D.901,C21(1923)	1	611018463
-W1		COPRIFASTON F. 6,3TR 63N004	3	522280232
-W1		PRESSACAVO 3246 PG13,5 + 3216B	1	526003246
-W1		FASTON F. A NASTRO 6,3 010101201	3	529101201
-W1		CAVO SEZ. 3x1,5	4,00m.	653015001
-W1.1		TERMINALE KE 35143 FASTON M/F	1	529035143
-W1.1		TERMINALE KE 39172 (6) ROSSO	1	529039172
-W1.1		CAVO FLEX 1,5 MMQ GIALLO/VERDE	0,30m.	651015010
-W1.2		COPRIFASTON F. 6,3TR 63N004	1	522280232
-W1.2		TERMINALE KE 39102 (3) ROSSO	1	529039102
-W1.2		FASTON F. A NASTRO 6,3 010101201	1	529101201
-W1.2		CAVO FLEX 1,5 MMQ GIALLO/VERDE	0,30m.	651015010
-W562		CAVO NEOGOMMA 3X0,75 NERO	0,40m.	653005001
-X562		11100101 CONTATTO F. x CONN. BIANCO	3	590935101
-X562		CONNETTORE AMP 480704 (BIANCO M.6)	1	594480704

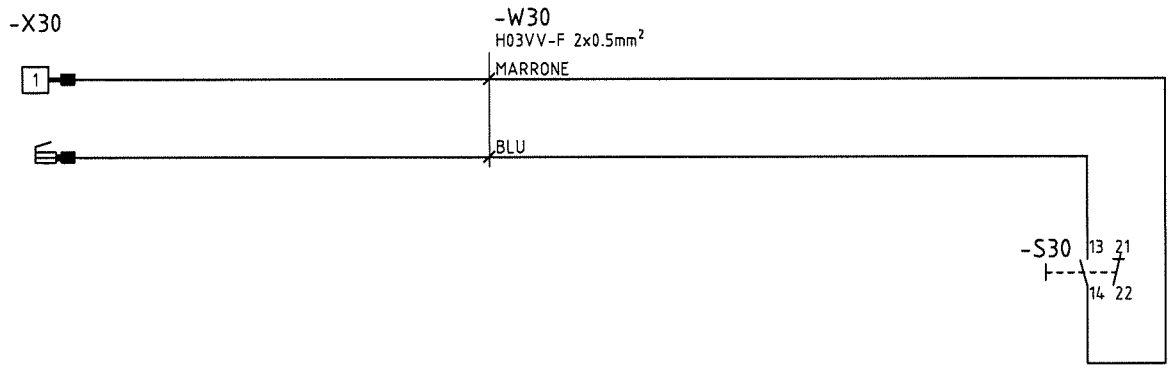

c				Data: 21.07.2000	Sostituito dal:	CLIENTE:	Tipo di macchina:	Kit elettrico start motore	=Q
b				Disegnatore: CIAPPESONI	Sostituisce il:		86SB48359		+A
a	Modifica:	Data:	Nome:	Normativa: IEC 750		ORDINE:		Disegno: 48359P — Schema elettrico	Foglio: 1 / 1 Fg.

LISTA MATERIALE

COD. : 86SB48359	**DATA : 21.07.2000**
MACCHINA : Kit start motore	**SCHEMA ELETTRICO : 48359P**

IDENT.	RIF.	DESCRIZIONE	CODICE
-S30	=Q/1.7	PULSANTE P9 EMERGENZA 24V A FUNGO	
-S30	=Q/1.7	CONTATTO CEMA P9B11VN (NA+NC)	530090011
-S30	=Q/1.7	PULSANTE CEMA P9MEM4RN FUNGO DM40 (EX E	530090353
-W30	=Q/1.4	TERMINALE WD 6907.0 - H0,5/14 ARANCIO	529006907
-W30	=Q/1.4	TERMINALE WD 6907.0 - H0,5/14 ARANCIO	529006907
-W30	=Q/1.4	TERMINALE WD 6907.0 - H0,5/14 ARANCIO	529006907
-W30	=Q/1.4	TERMINALE KE 35143 FASTON M/F	529035143
-W30	=Q/1.4	CAVO NEOGOMMA SEZ. 2X0,50 0,40m.	652005000
-X30	=Q/1.2	MORSETTIERA FEI 6EDS-12 (21.311.1253.0) 0,12	662006122

LISTA MATERIALE

COD. : 940503299	DATA : 04.09.2001
MACCHINA : Elaboratore	SCHEMA ELETTRICO : 52911P

IDENT.	RIF.	DESCRIZIONE	CODICE
		PANNELLO LEXAN C/PULS. MOD.1351 C22/BIKE	050135103
		TESTATA PORTAPESI 'C22 BIKE' DIS.24795/	143247951
		VITE TS M 3X6 UNI 6109	315231015
		VITE TS M 3X6 UNI 6109	315231015
		VITE TS M 3X6 UNI 6109	315231015
		VITE TS M 3X6 UNI 6109	315231015
		DADO M3 UNI 5588	321232003
		DADO M3 UNI 5588	321232003
		DADO M3 UNI 5588	321232003
		DADO M3 UNI 5588	321232003
		DISTANZIALE M3 GA/3498 7 MM (EZ MF10H305	527034980
		DISTANZIALE M3 GA/3498 7 MM (EZ MF10H305	527034980
		DISTANZIALE M3 GA/3498 7 MM (EZ MF10H305	527034980
		DISTANZIALE M3 GA/3498 7 MM (EZ MF10H305	527034980
		SCHEDA ELABORATORE 'C22 BIKE'	940513300

LISTA MATERIALE

COD. : 940513300	**DATA : 21.07.00**
MACCHINA : Elaboratore	**SCHEMA ELETTRICO : 48360P**

IDENT.	RIF.	DESCRIZIONE	CODICE
IC20		MEMORIA EPROM 27C256	645027256
SCHEDA		CIRCUITO STAMPATO 'SMD' C31.. 18999/1 (	670189995

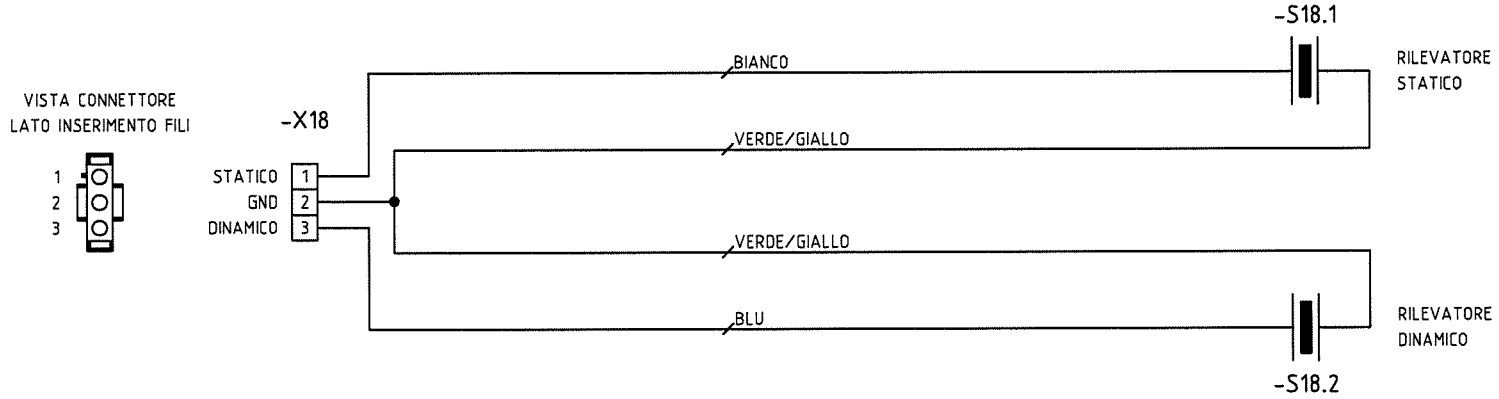

NOTE DI MONTAGGIO:

- I due fili colore "verde/giallo" devono essere collegati tra loro tramite il contatto -X18(2).

c				Data: 02.10.1995	Sostituito dal:	CLIENTE:	Tipo di macchina: 940702255	Gruppo rilevatori piezo statico/dinamico	=Q
b				Disegnatore: CIAPPESONI	Sostituisce il:				+A
a	AGGIORNAMENTO	15.03.2001	CIAPPESONI	Normativa: IEC 750		ORDINE:		Disegno: 31194P — Schema elettrico	Foglio: 1 / 1 Fg.
	Modifica:	Data:	Nome:						

LISTA MATERIALE

COD. : 940702255	**DATA : 16.03.2001**
MACCHINA : Gruppo rilevatori statico/dinamico	**SCHEMA ELETTRICO : 31194P**

IDENT.	RIF.	DESCRIZIONE	CODICE
-S18.1		CERAMICA PIEZO AD ANELLO õ=38X13X6	127381306
-S18.1		TUBETTO ISOLANTE PER PIEZO DIS.16521/	217016521
-S18.1		RONDELLA PER RILEVATORI DIS.14988/	420714988
-S18.1		RONDELLA PER RILEVATORI DIS.14988/	420714988
-S18.1		CAVO FLEX 1 MMQ BIANCO 0,75m.	651010002
-S18.1		CAVO FLEX 1 MMQ GIALLO/VERDE 0,75m.	651010010
-S18.1		CIRCUITO STAMPATO 12767 (RILEVATORI PIE	670127670
-S18.1		CIRCUITO STAMPATO 12767 (RILEVATORI PIE	670127670
-S18.2		CERAMICA PIEZO AD ANELLO õ=38X13X6	127381306
-S18.2		TUBETTO ISOLANTE PER PIEZO DIS.16521/	217016521
-S18.2		RONDELLA PER RILEVATORI DIS.14988/	420714988
-S18.2		RONDELLA PER RILEVATORI DIS.14988/	420714988
-S18.2		CAVO FLEX 1 MMQ BLU 0,75m.	651010005
-S18.2		CAVO FLEX 1 MMQ GIALLO/VERDE 0,75m.	651010010
-S18.2		CIRCUITO STAMPATO 12767 (RILEVATORI PIE	670127670
-S18.2		CIRCUITO STAMPATO 12767 (RILEVATORI PIE	670127670
-X18		CONTATTO A NASTRO FEMM.(AMP BIANCHI)ART.	590935101
-X18		CONTATTO A NASTRO FEMM.(AMP BIANCHI)ART.	590935101
-X18		CONTATTO A NASTRO FEMM.(AMP BIANCHI)ART.	590935101
-X18		CONNETTORE AMP 480700 (BIANCO M.3)	594480700

LISTA MATERIALE

COD. : 940603296	**DATA : 21.07.00**
MACCHINA : Datore di fase	**SCHEMA ELETTRICO : 48361P**

IDENT.	RIF.	DESCRIZIONE	CODICE
		SCHEDA DATORE DI FASE C22/BIKE	940513825
		SUPPORTO DATORE DI FASE 'C22 BIKE' DIS.2	420724797
		SOSTEGNO SCHEDA DAT.FASE 'C22/BIKE' DIS.	420724790
		FERMACAVO IN ALLUMINIO DIS.10639/P	420610639