FRONT VIEW

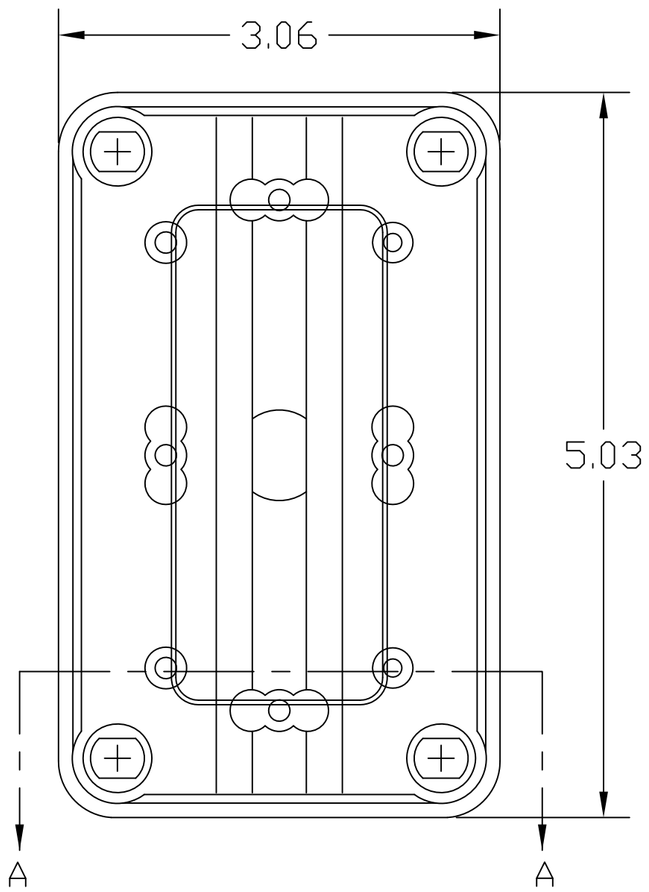

RIGHT SIDE VIEW

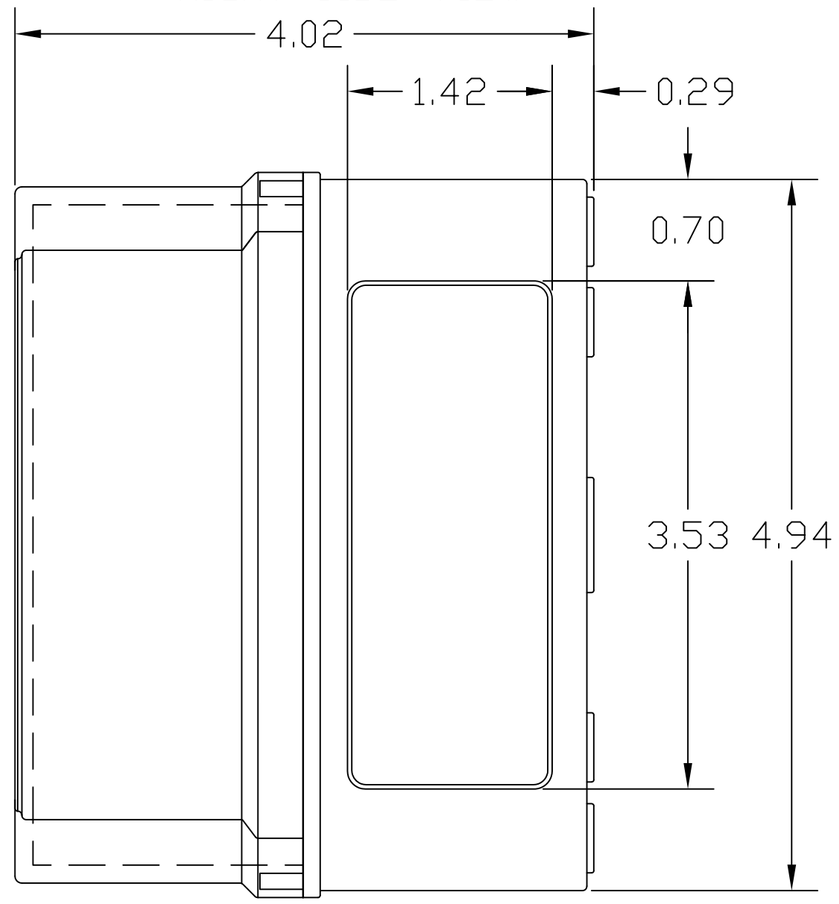

FRONT VIEW COVER REMOVED

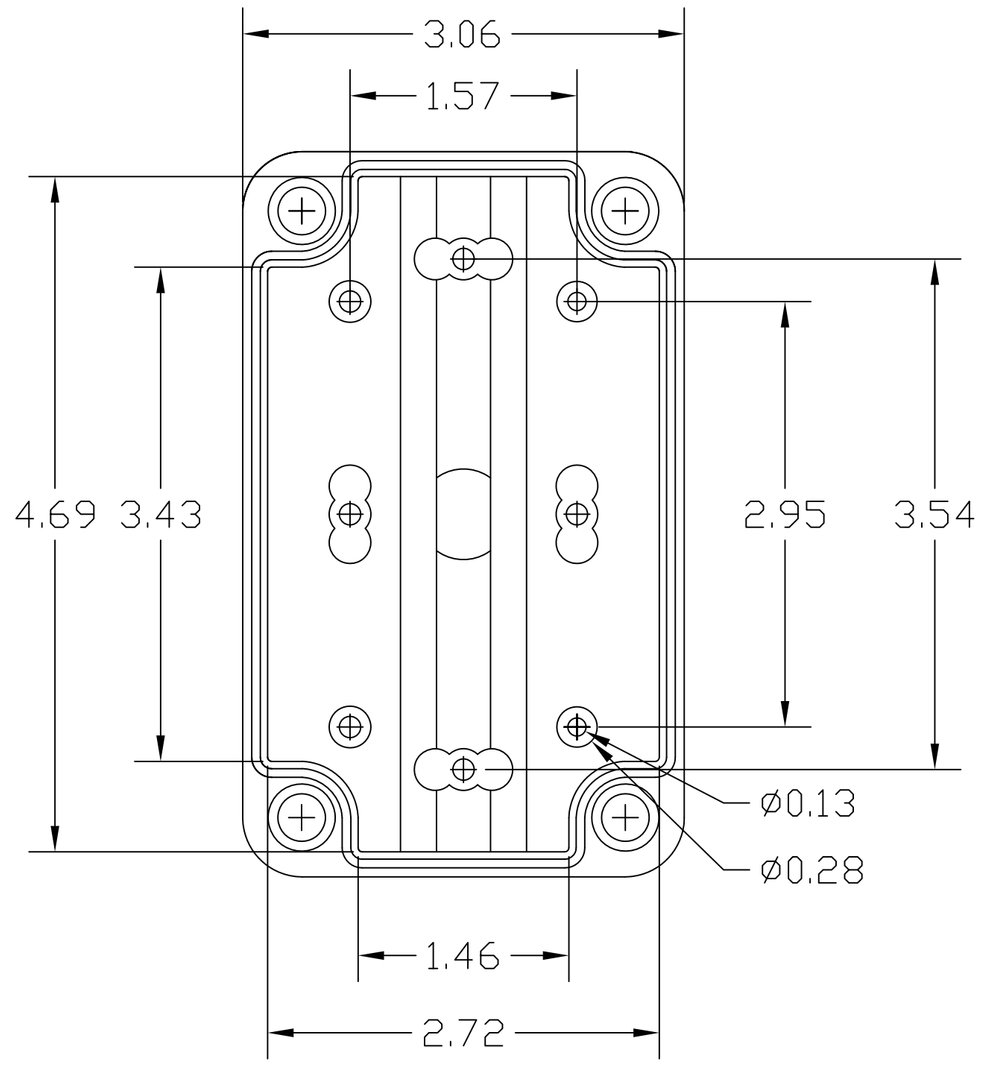

END VIEW

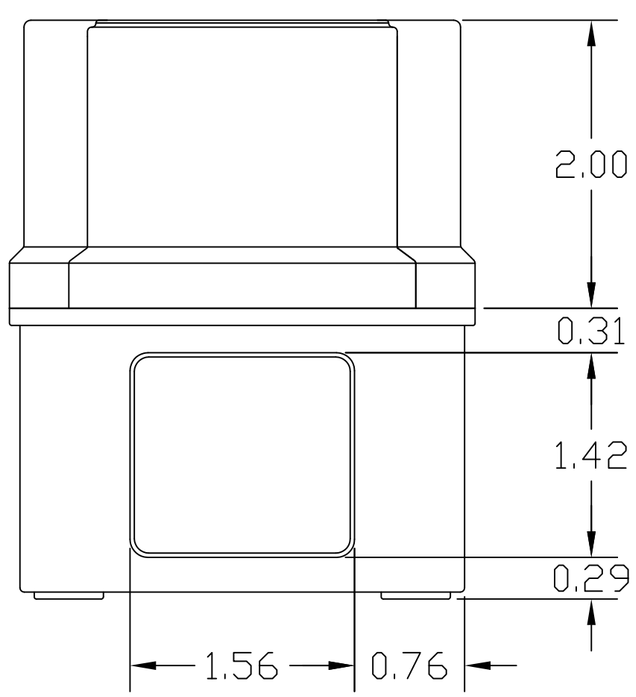

SECTION VIEW A-A

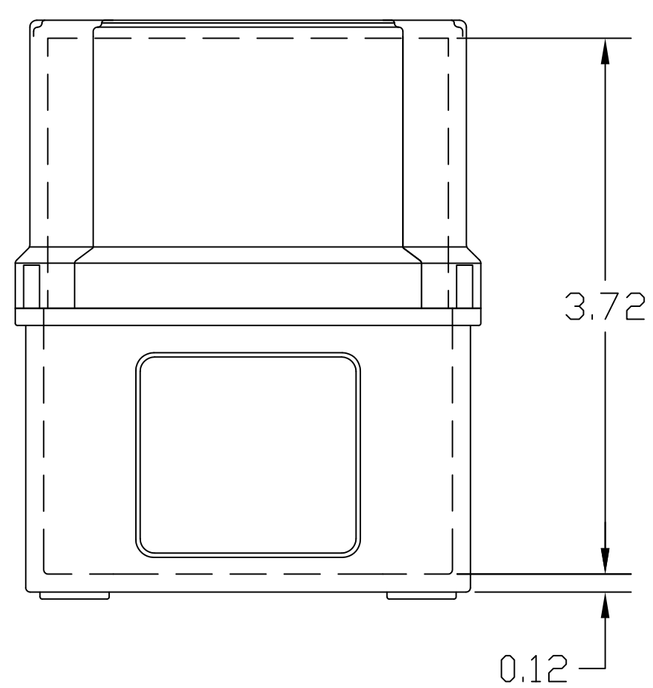

THIS DRAWING IS THE CONFIDENTIAL AND PROPRIETARY PROPERTY OF VYNCKIER ENCLOSURE SYSTEMS, AND SHALL NOT BE REPRODUCED OR DISCLOSED TO OTHERS EXCEPT BY EXPRESS WRITTEN PERMISSION OF VYNCKIER ENCLOSURE SYSTEM INC.

UNLESS OTHERWISE SPECIFIED
DIMENSIONS ARE IN INCHES
TOLERANCES
.XX ± .02
.XXX ± .01
DO NOT SCALE DRAWING

DESIGNED BY:

VYNCKIER
ENCLOSURE SYSTEMS, INC.

VYNCKIER PART #

VM534CT
VM SERIES ENCLOSURE

DRAWN BY:	DATE:	CHECKED BY:	DATE:
T.SERRANO	10/07/05		
SCALE: FULL	REV: -	DRAWING NO. VM534	