23375

REV	REVISION	BY	CHK	DATE

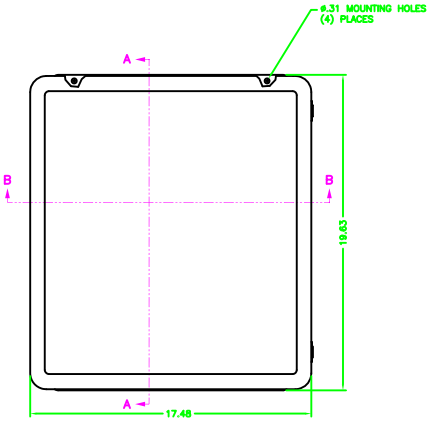

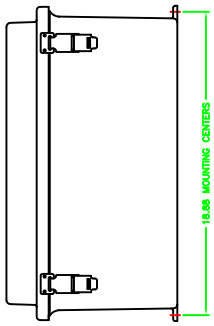

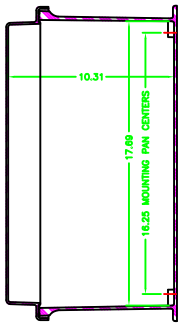

SECTION A–A

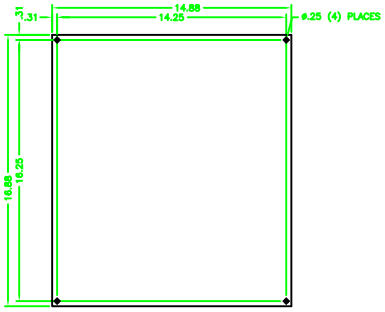

MOUNTING PAN

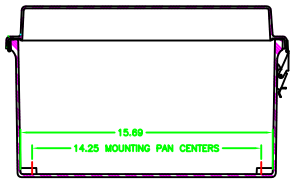

SECTION B–B

ADALET A SCOTT FETZER COMPANY Hazardous Location Rated Accessories	NAME MAX-FG-181610RCHOR RAISED COVER, CONTINUOUS HINGE, QUICK RELEASE LATCHES		
	DRAWN BY TJ	DATE 9-12-06	
	DWG APPROVAL	DWG NUMBER 1=2	
	DWG APPROVAL	REV 0	
	DWG NO MAX-FG-181610RCHOR	23375	SHT 1OF1