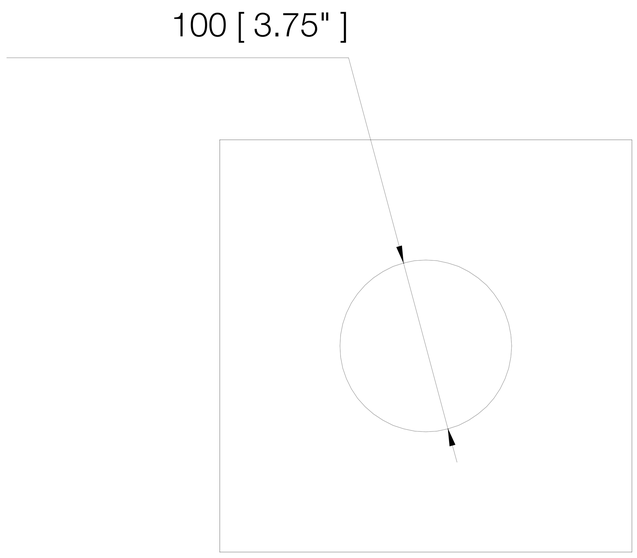
100 [3.75"]

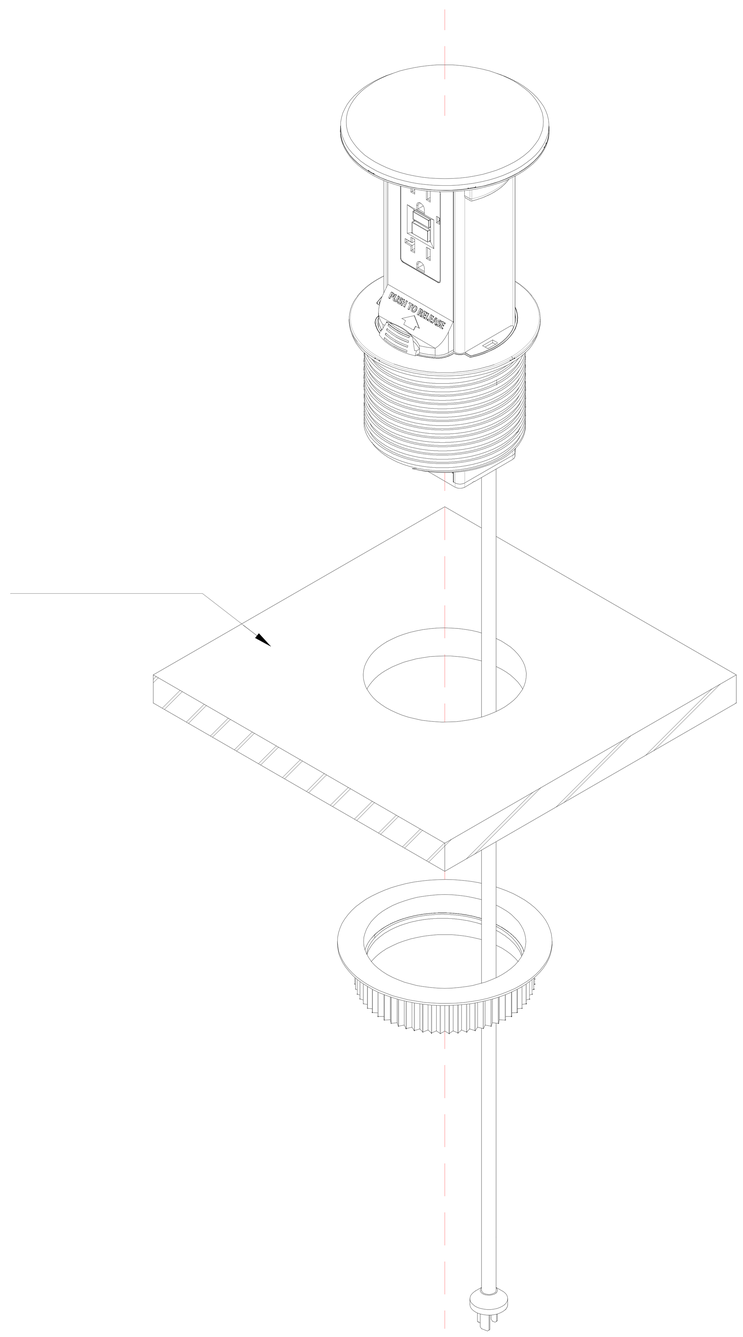
PUSH TO RELEASE

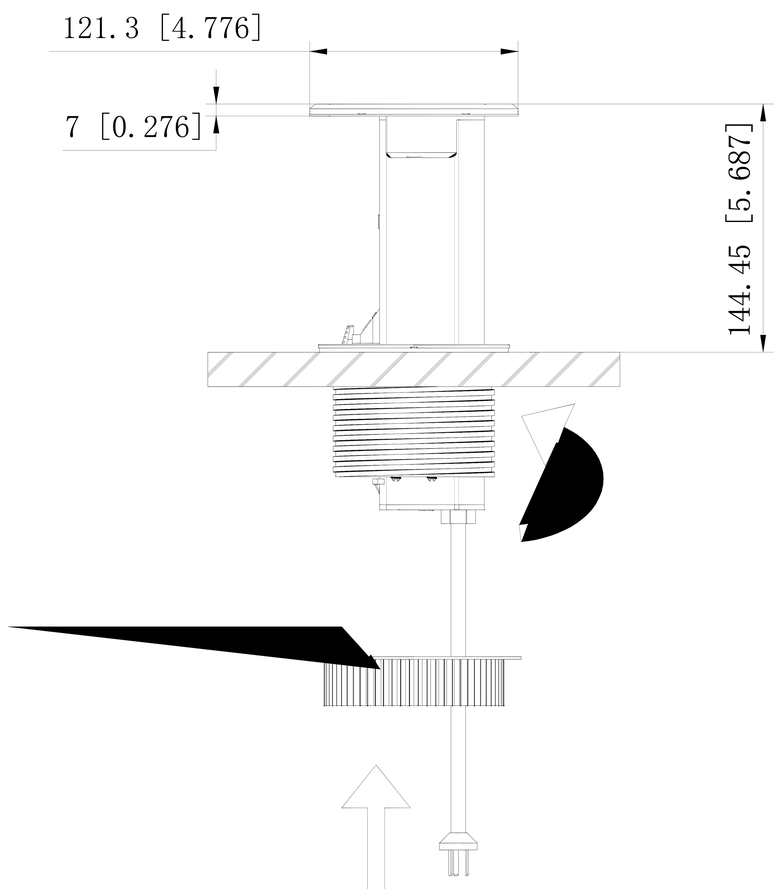
121.3 [4.776]
7 [0.276]
144.45 [5.687]

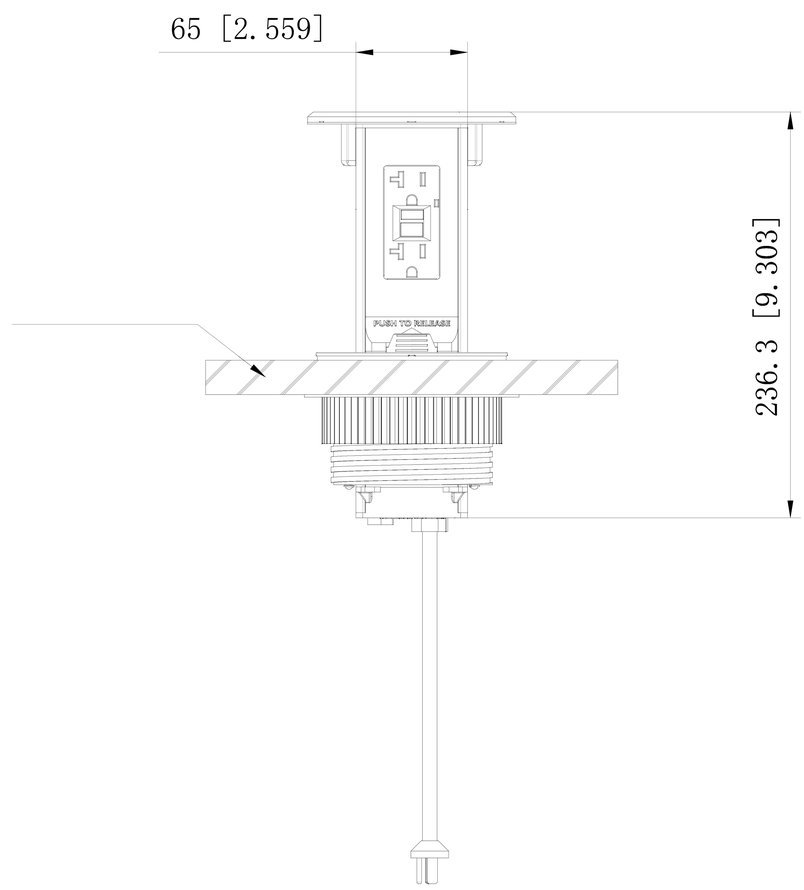
65 [2.559]
PUSH TO RELEASE
236.3 [9.303]