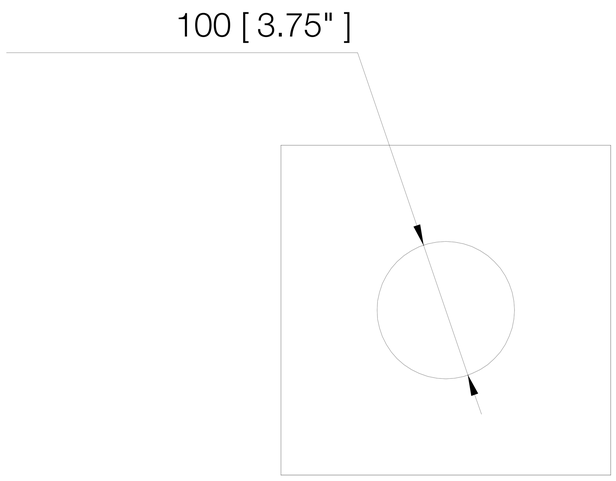
100 [3.75"]

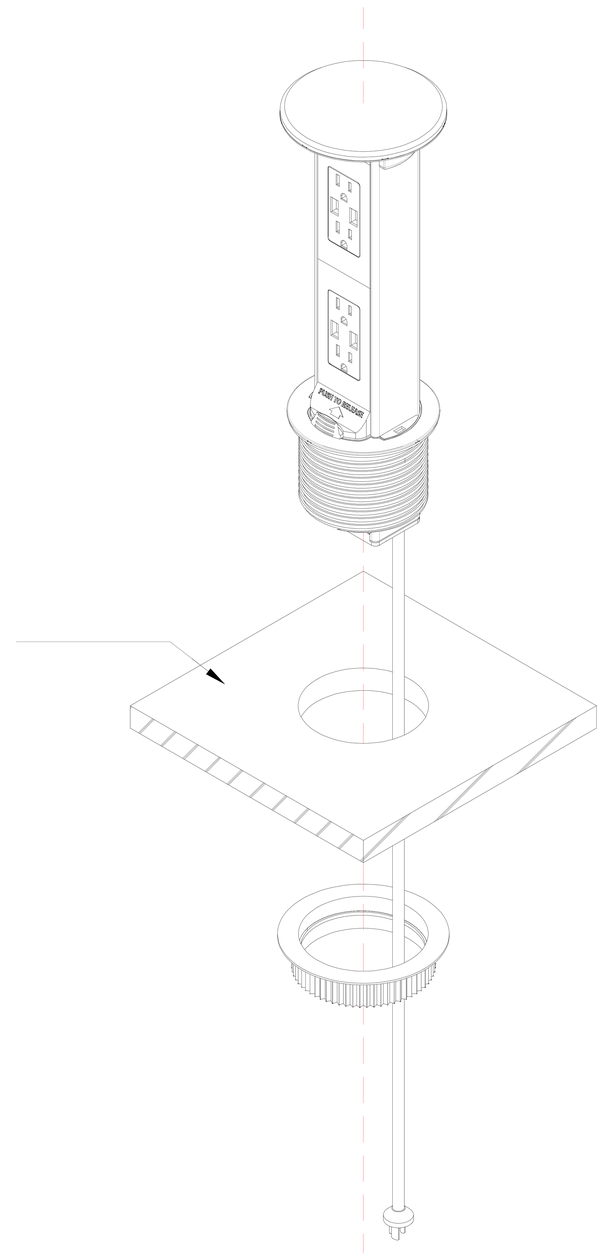
PUSH TO RELEASE

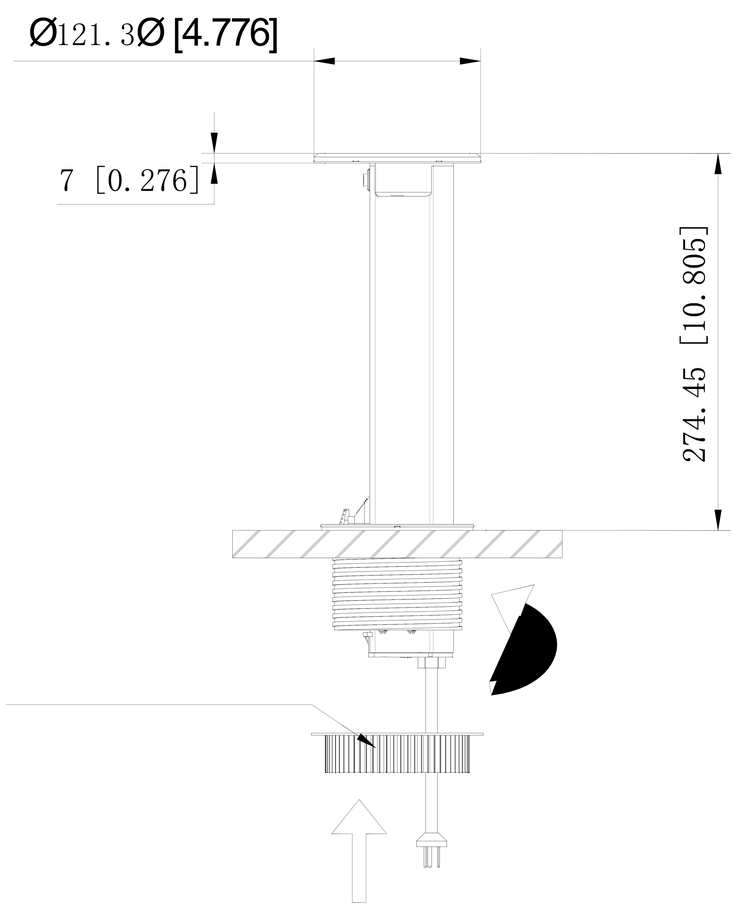
Ø121.3Ø [4.776]
7 [0.276]
274.45 [10.805]

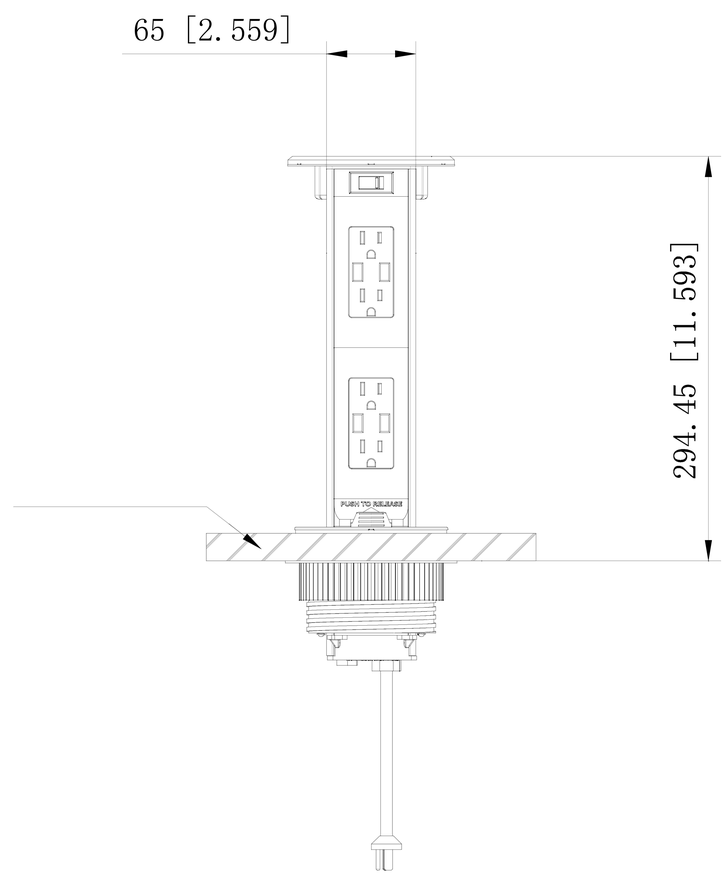
65 [2.559]
294.45 [11.593]
PUSH TO RELEASE