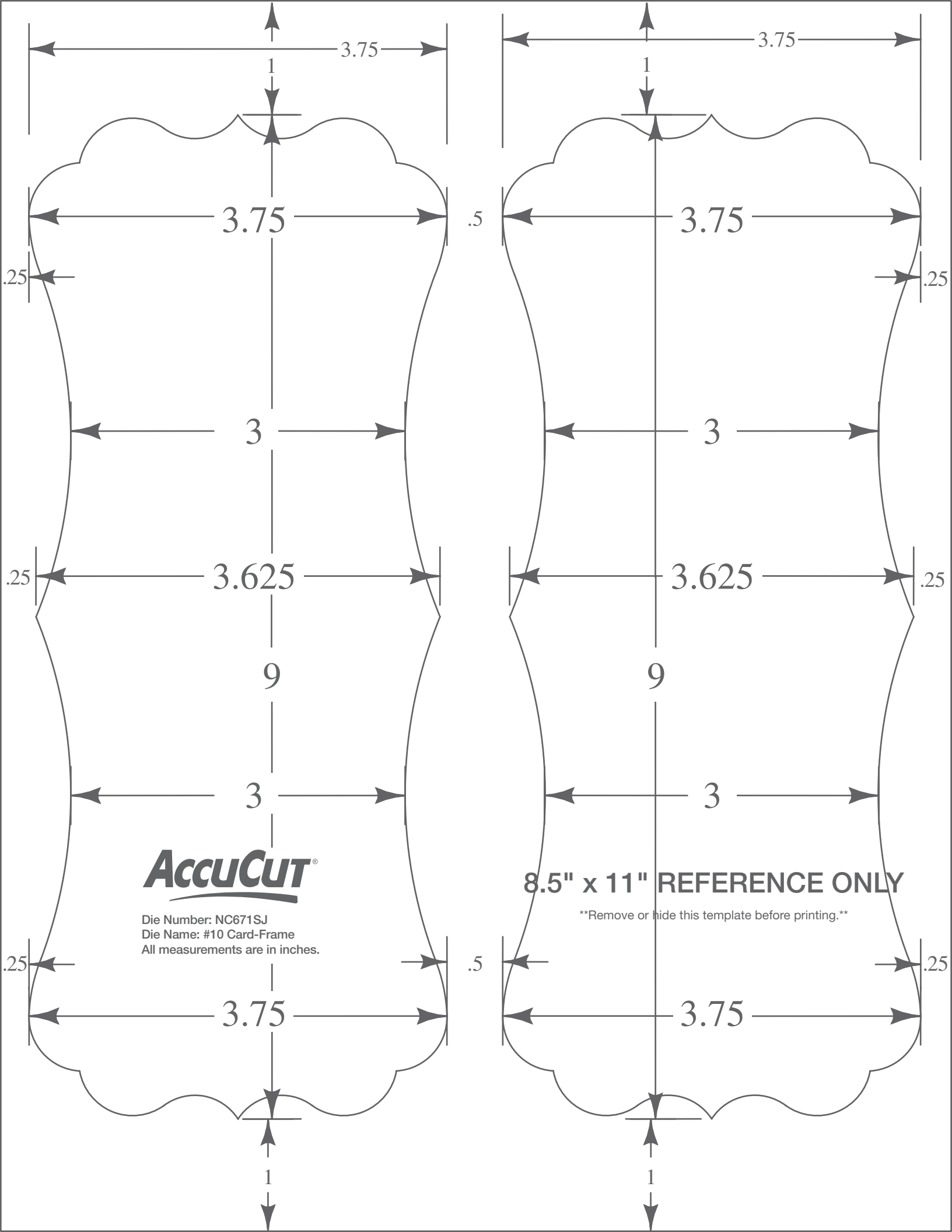
3.75
1
3.75
.5
.25
3
3.625
9
3
3.75
1
AccuCut®
Die Number: NC671SJ
Die Name: #10 Card-Frame
All measurements are in inches.
8.5" x 11" REFERENCE ONLY
Remove or hide this template before printing.