LX Controller Adapter Plate • Installation Instructions

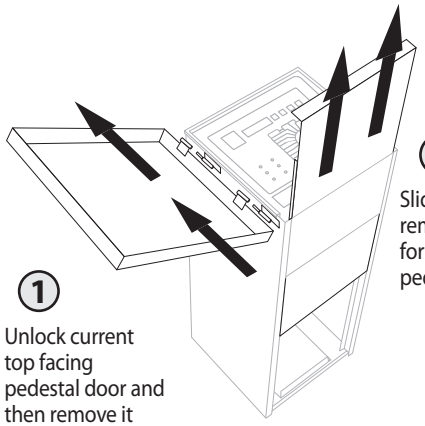

1 Unlock current top facing pedestal door and then remove it from the hinges

2 Slide up and remove the forward facing pedestal door

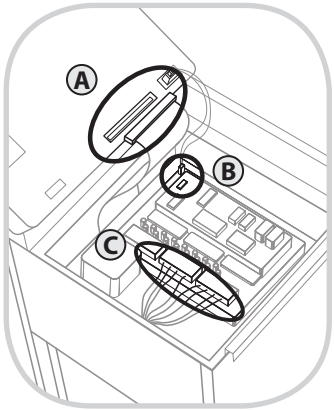

3 Swing controller front panel open and remove (A) front panel connector (B) sensor[??] and (C) irrigation zone wires

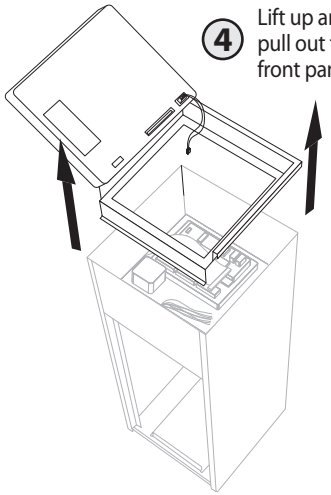

4 Lift up and pull out the front panel

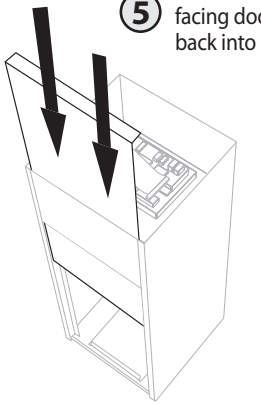

5 Slide forward facing door back into base.

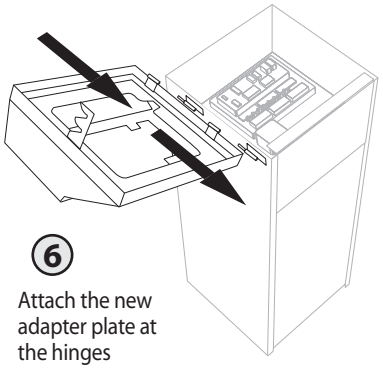

6 Attach the new adapter plate at the hinges

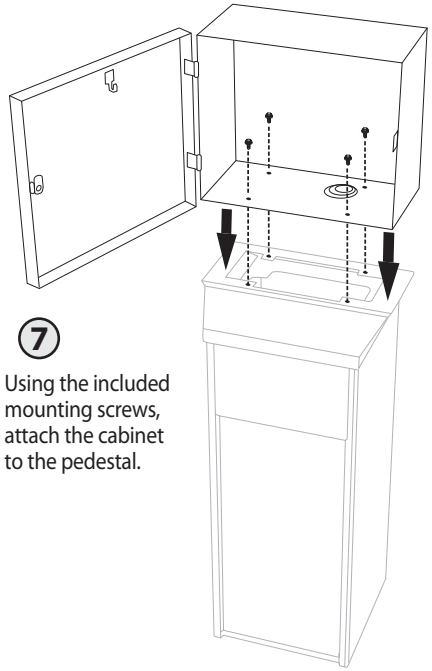

7 Using the included mounting screws, attach the cabinet to the pedestal.

8 Remove knockouts as required.

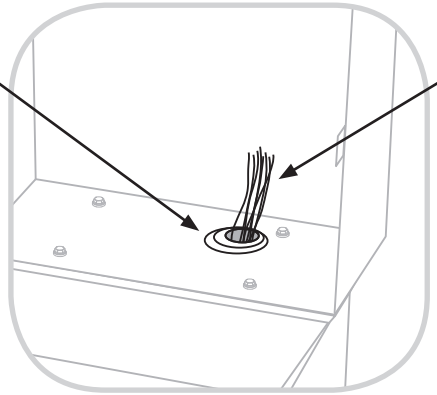

9 Pull irrigation zone wiring through knockout.

Rain Bird Corporation
6991 E. Southpoint Road
Tucson, AZ 85756
Phone: (520) 741-6100
Fax: (520) 741-6522

Rain Bird Corporation
970 West Sierra Madre Avenue
Azusa, CA 91702
Phone: (626) 812-3400
Fax: (626) 812-3411

Rain Bird International, Inc.
1000 West Sierra Madre Ave.
Azusa, CA 91702
Phone: (626) 963-9311
Fax: (626) 852-7343

Rain Bird Technical Services
(800) RAINBIRD (U.S. and Canada)

Specification Hotline
800-458-3005 (U.S. and Canada)

The Intelligent Use of Water™
www.rainbird.com

® Registered Trademark of Rain Bird Corporation
© 2012 Rain Bird Corporation 11/12