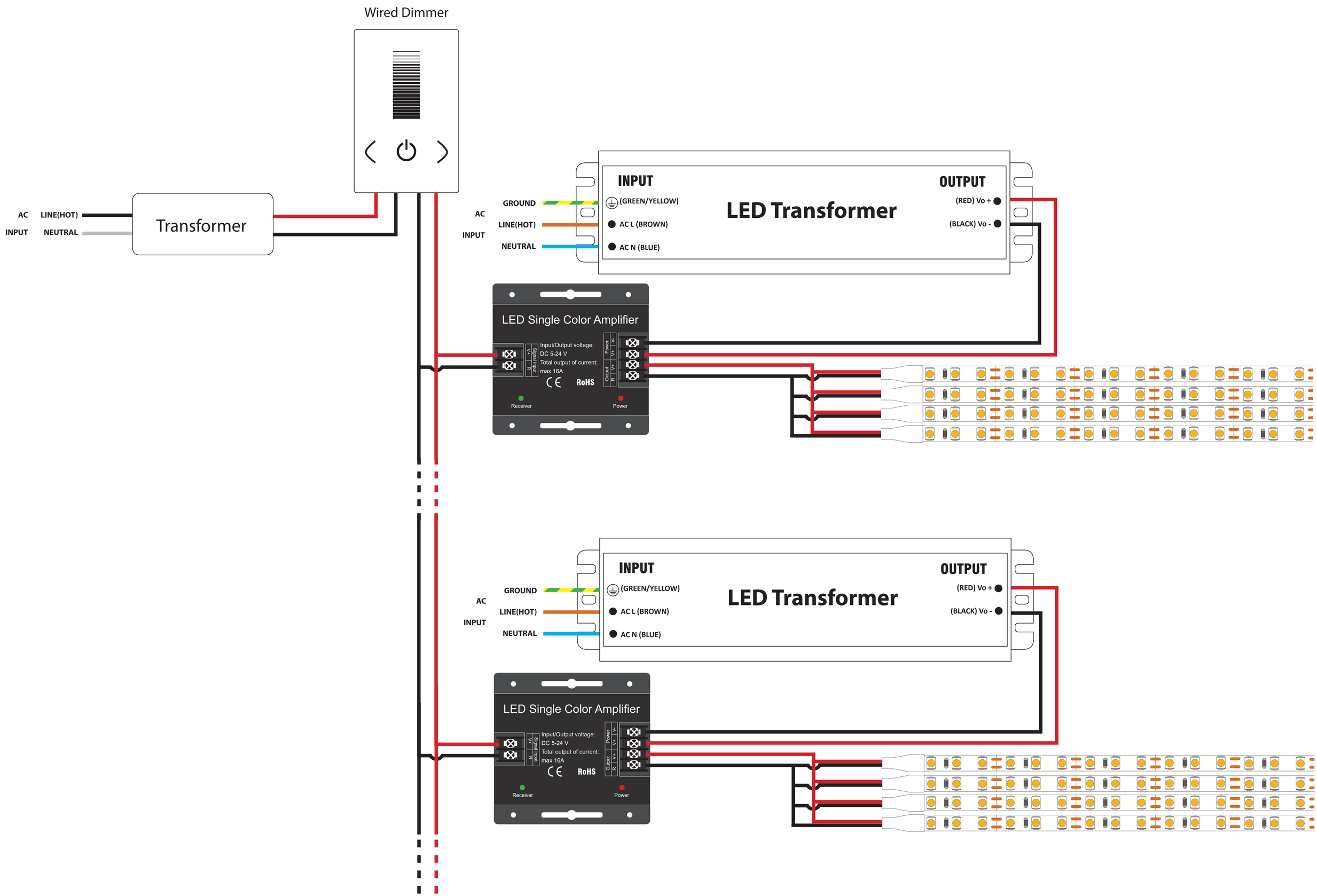

Wiring diagram - Single Color Low Voltage Wired Dimmer with BLK Single Color Amplifier