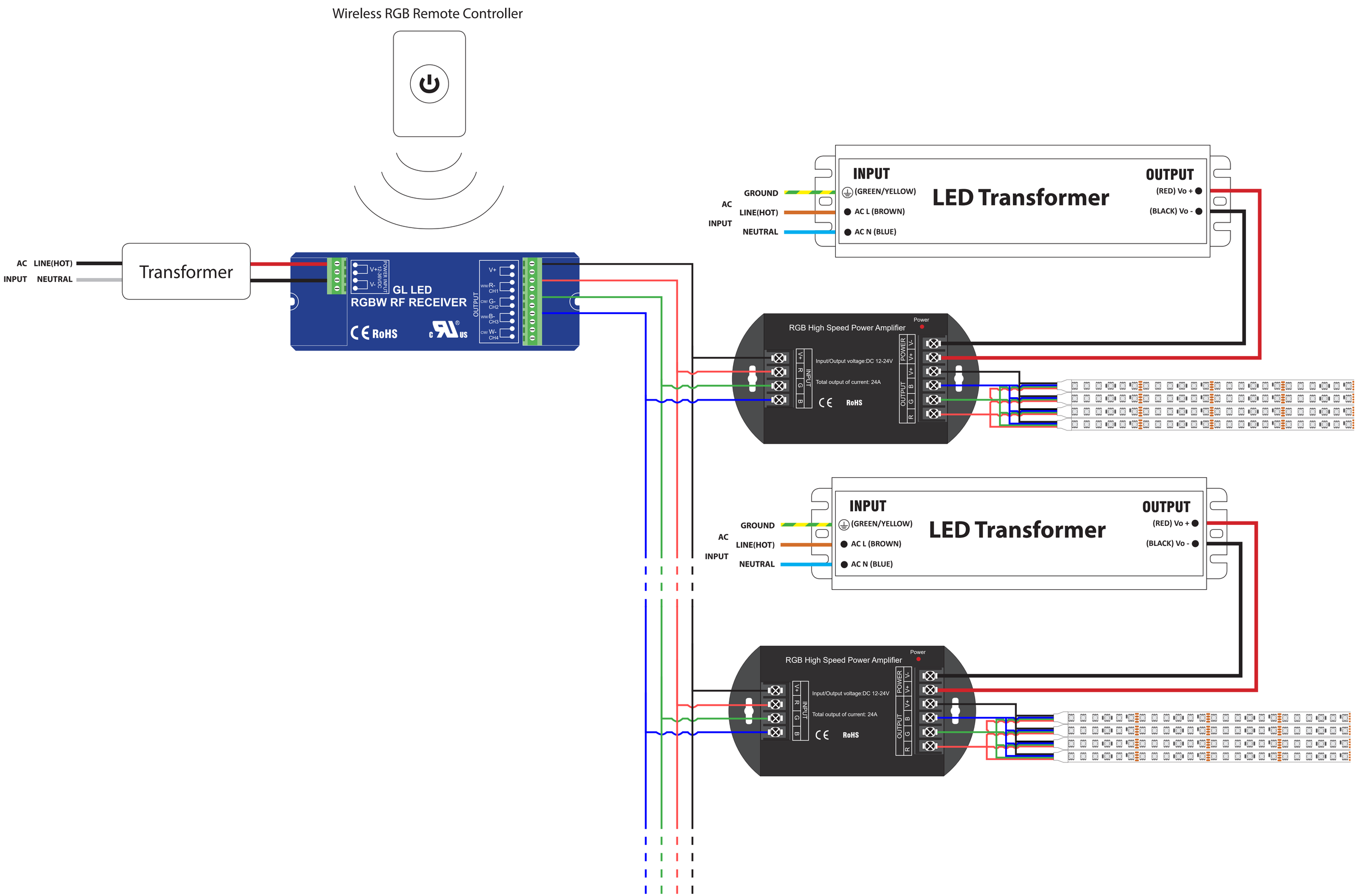

Wiring diagram - RGB Color Changing Wireless Controller with BLK RGB Amplifier