emergency lighting products
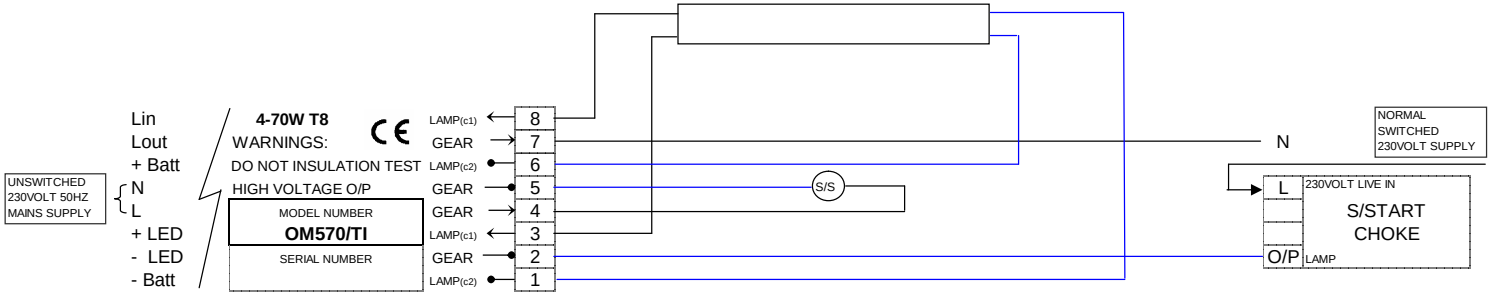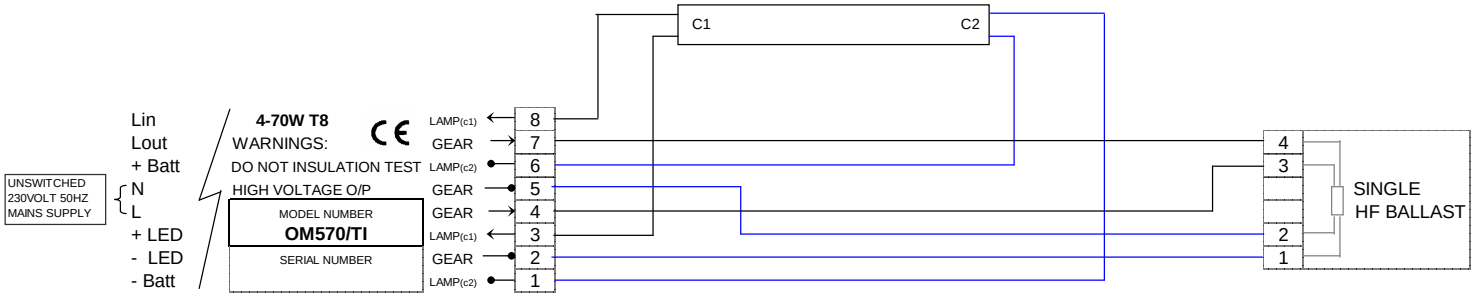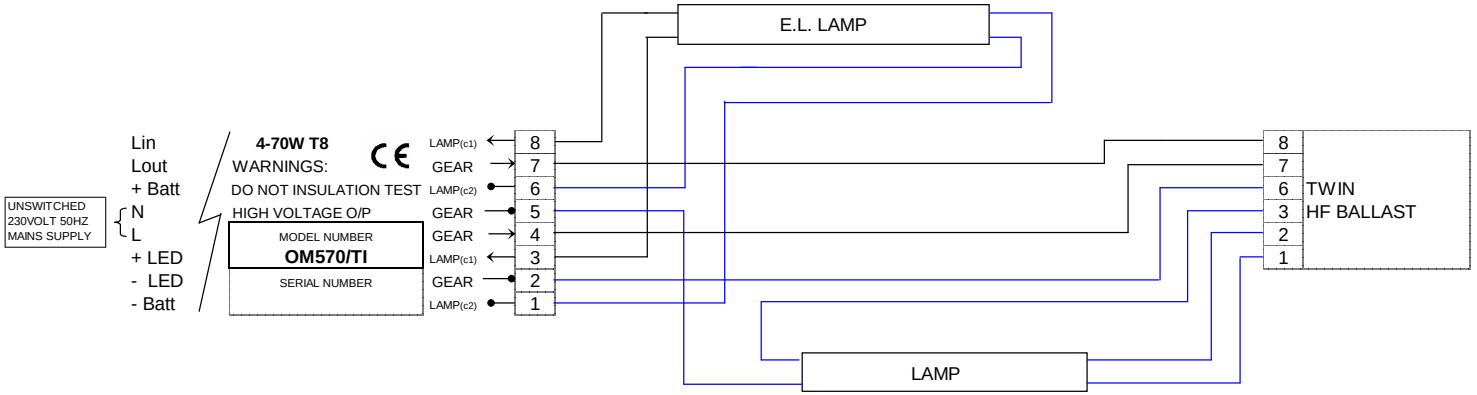
ELP CONVERSION DIAGRAMS FOR HF AND SWITCH START BALLASTS