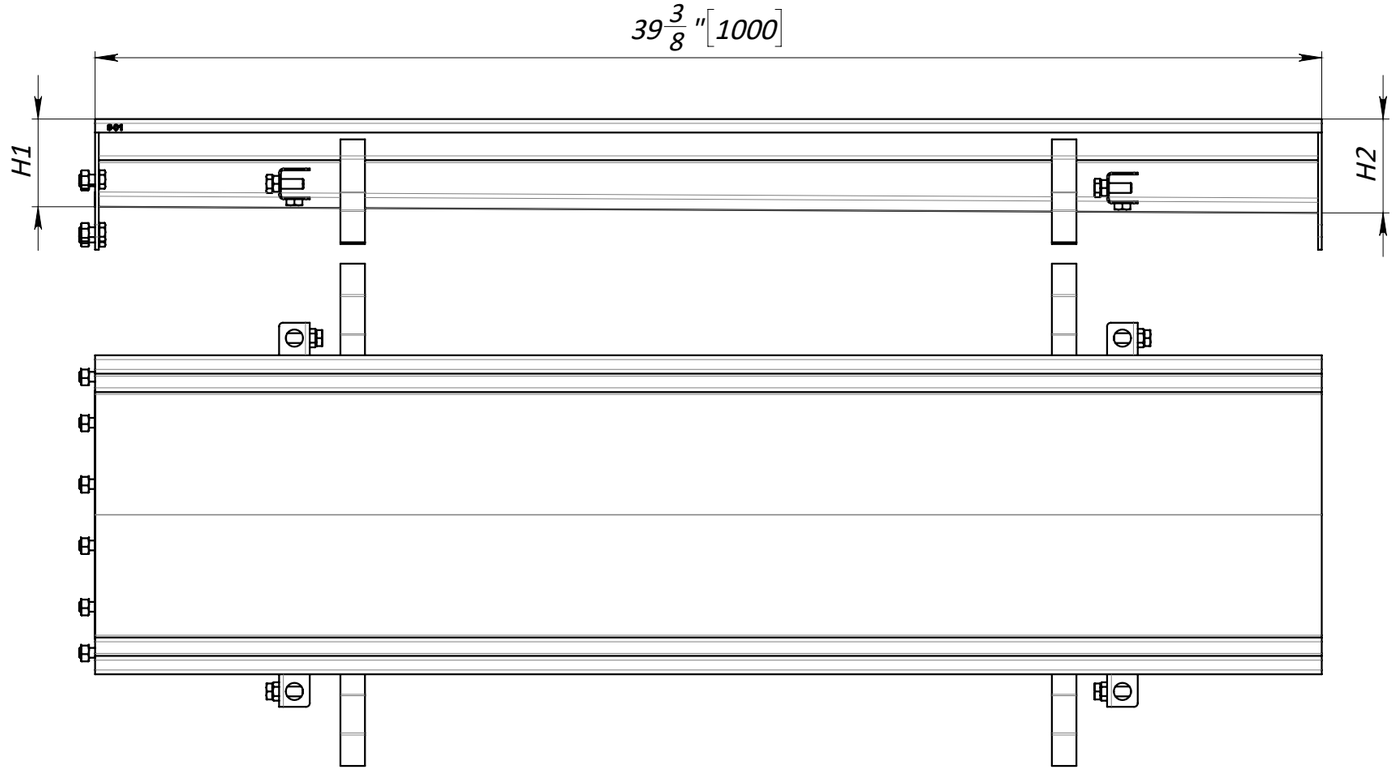

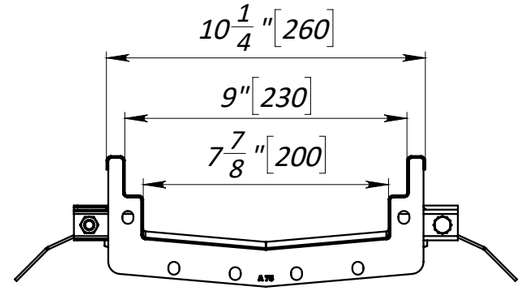

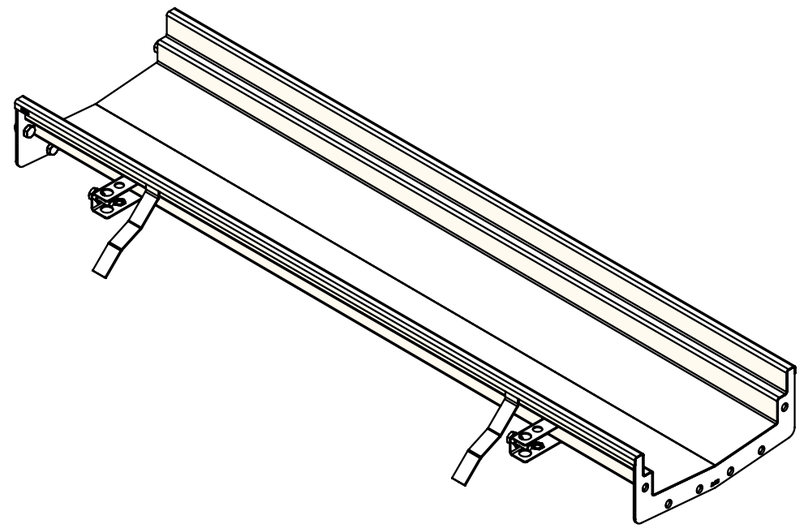

№	Article	Name	Weight, kg	Weight, lb	H1, mm	H1, inch	H2, mm	H2, inch
1	992401	8" Stainless Steel Pre Slope Drain Channel module system №01	5.78	12.72	70	2,76	75	2,95
2	992402	8" Stainless Steel Pre Slope Drain Channel module system №02	5.85	12.87	75	2,95	80	3,15
3	992403	8" Stainless Steel Pre Slope Drain Channel module system №03	5.92	13.02	80	3,15	85	3,35
4	992404	8" Stainless Steel Pre Slope Drain Channel module system №04	6.11	13.44	85	3,35	90	3,54
5	992405	8" Stainless Steel Pre Slope Drain Channel module system №05	6.34	13.95	90	3,54	95	3,74
6	992406	8" Stainless Steel Pre Slope Drain Channel module system №06	6.41	14.1	95	3,74	100	3,94
7	992407	8" Stainless Steel Pre Slope Drain Channel module system №07	6.48	14.26	100	3,94	105	4,13
8	992408	8" Stainless Steel Pre Slope Drain Channel module system №08	6.67	14.67	105	4,13	110	4,33
9	992409	8" Stainless Steel Pre Slope Drain Channel module system №09	6.87	15.11	110	4,33	115	4,53
10	992410	8" Stainless Steel Pre Slope Drain Channel module system №10	6.94	15.27	115	4,53	120	4,72
11	992411	8" Stainless Steel Pre Slope Drain Channel module system №11	7.01	15.42	120	4,72	125	4,92
12	992412	8" Stainless Steel Pre Slope Drain Channel module system №12	7.20	15.84	125	4,92	130	5,12
13	992413	8" Stainless Steel Pre Slope Drain Channel module system №13	7.40	16.28	130	5,12	135	5,31
14	992414	8" Stainless Steel Pre Slope Drain Channel module system №14	7.47	16.43	135	5,31	140	5,51
15	992415	8" Stainless Steel Pre Slope Drain Channel module system №15	7.54	16.59	140	5.51	145	5.71

1. Dimensions for reference, inch [mm]
2. Delivery and packaging are carried out in accordance with the terms of the contract
3. The manufacturer reserves the right, without notice to the consumer, to make changes to the design of the products for improvement of their technological and operational parameters, which will not affect the quality and properties of the product.

UNLESS OTHERWISE SPECIFIED:
DIMENSIONS ARE IN MILLIMETERS
SURFACE FINISH:
TOLERANCES: ISO 2768-m
LINEAR:
ANGULAR:

FINISH: passivated

DEBURR AND BREAK SHARP EDGES

DO NOT SCALE DRAWING

REVISION

VODALAND

	NAME	SIGNATURE	DATE
DRAWN	Halushka		28.08.22
CHK'D	Karetin		
APPV'D			
MFG			
Q.A			

TITLE: 8" Stainless Steel Pre Slope Drain Channel module system №01

MATERIAL: Stainless Steel

WEIGHT: 12.72 lb /5.78kg

ARTICLE: 992401

A3

SCALE:1:5

SHEET 1 OF 1