D-D

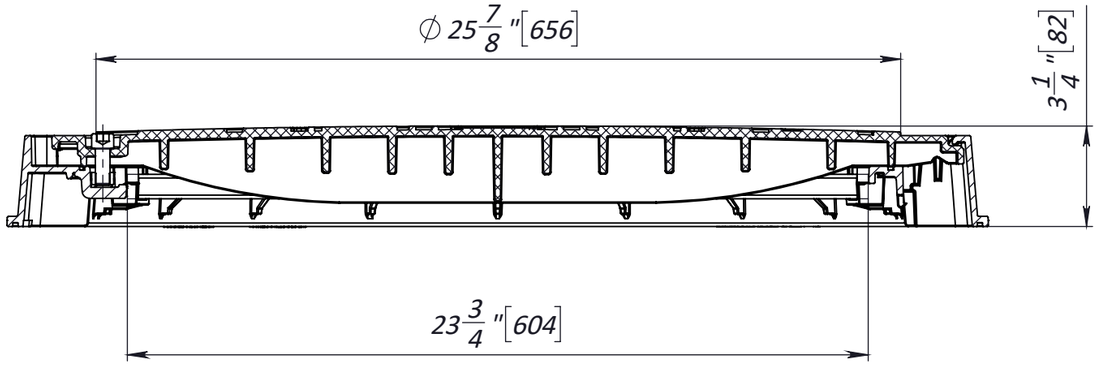

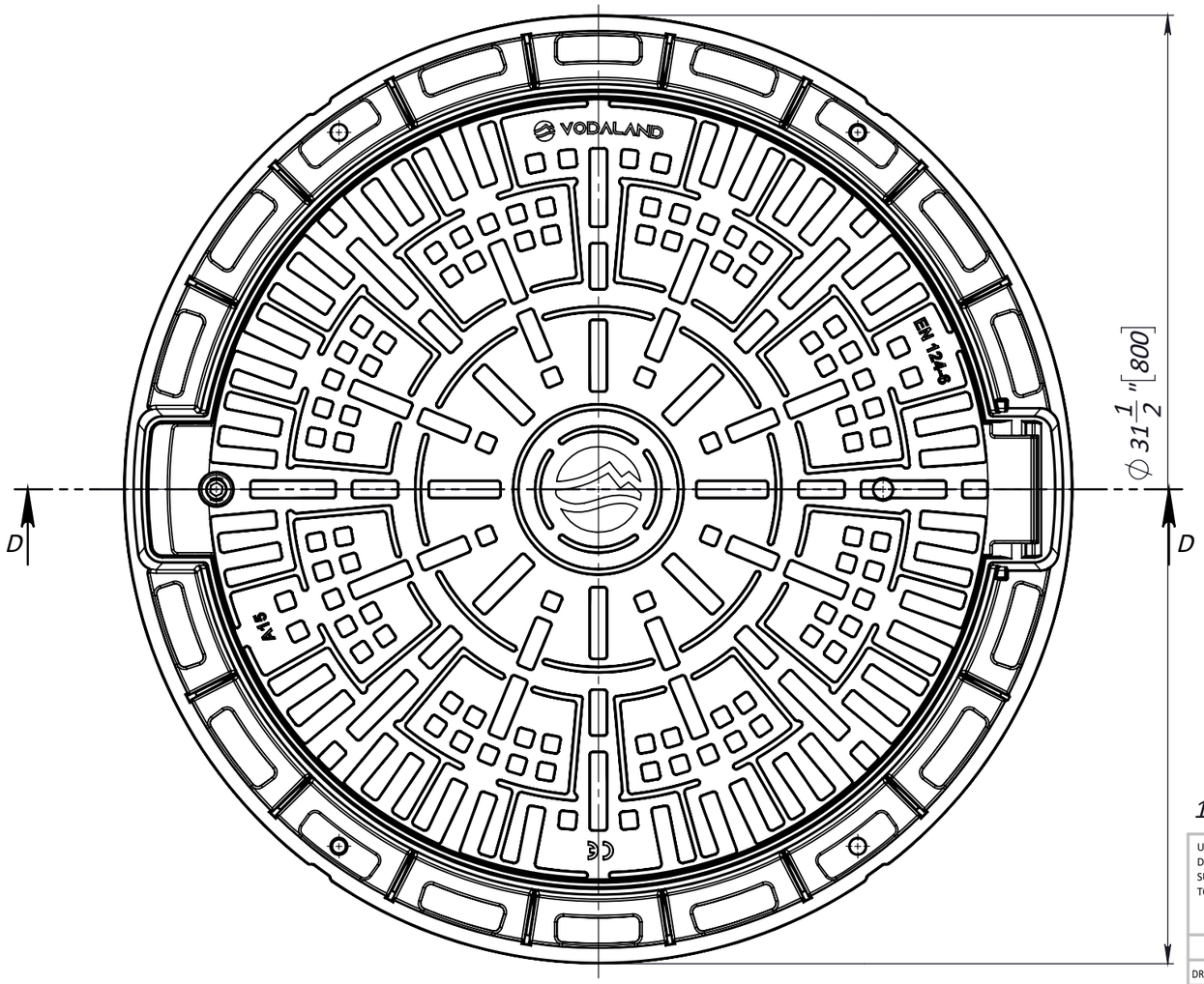

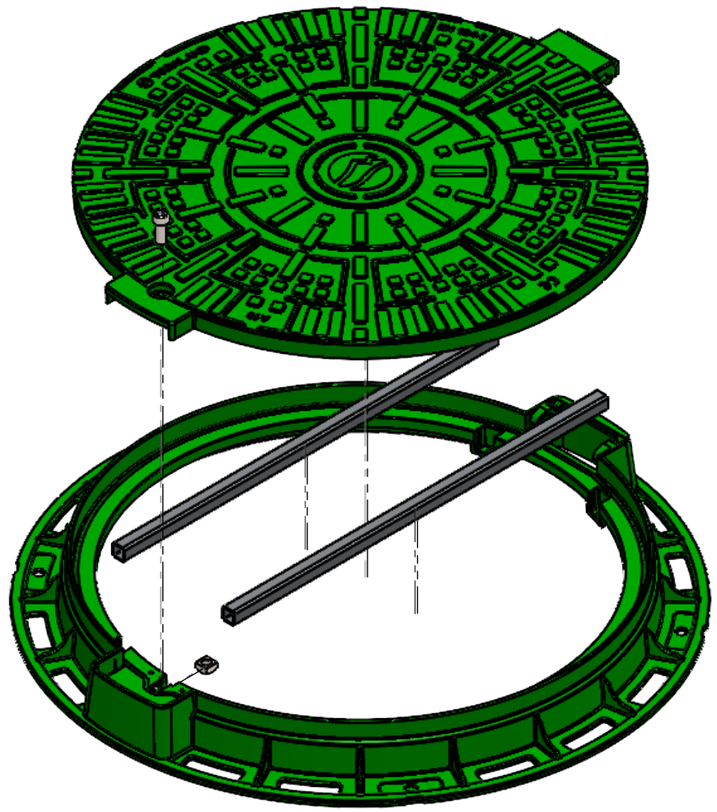

1. Deviation of the actual weight from the nominal - 8%

UNLESS OTHERWISE SPECIFIED: DIMENSIONS ARE IN MILLIMETERS SURFACE FINISH: TOLERANCES: LINEAR: ANGULAR:	FINISH:			DEBURR AND BREAK SHARP EDGES	DO NOT SCALE DRAWING	REVISION A-01
	NAME	SIGNATURE	DATE		VODALAND	
DRAWN			09.05.22		TITLE: Hatch	
CHK'D						
APPV'D						
MFG						
Q.A				MATERIAL:	ARTICLE: 35288-227	A3
				WEIGHT: lb 16.66/ 7.56 kg	SCALE:1:5	SHEET 1 OF 1