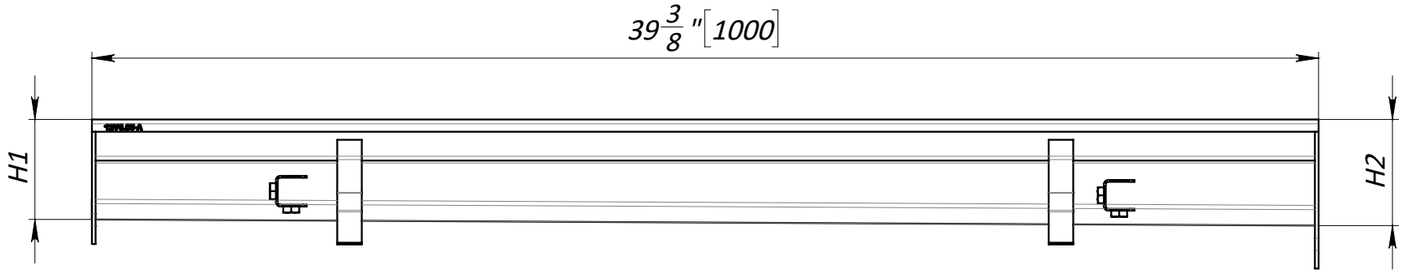

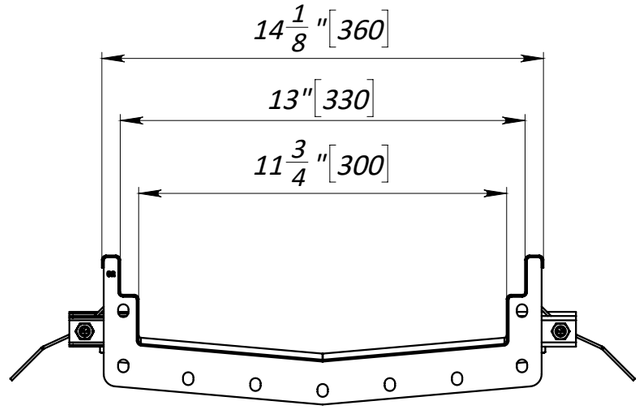

№	Article	Name	Weight, kg	Weight, lb	H1. mm	H1. inch	H2. mm	H2. inch
1	992601	12" Stainless Steel Pre Slope Drain Channel module system №01	7.00	15.4	80	3,15	85	3,35
2	992602	12" Stainless Steel Pre Slope Drain Channel module system №02	7.21	15.86	85	3,35	90	3,54
3	992603	12" Stainless Steel Pre Slope Drain Channel module system №03	7.26	15.97	90	3,54	95	3,74
4	992604	12" Stainless Steel Pre Slope Drain Channel module system №04	7.31	16.08	95	3,74	100	3,94
5	992605	12" Stainless Steel Pre Slope Drain Channel module system №05	7.53	16.57	100	3,94	105	4,13
6	992606	12" Stainless Steel Pre Slope Drain Channel module system №06	7.75	17.05	105	4,13	110	4,33
7	992607	12" Stainless Steel Pre Slope Drain Channel module system №07	7.79	17.14	110	4,33	115	4,53
8	992608	12" Stainless Steel Pre Slope Drain Channel module system №08	7.84	17.25	115	4,53	120	4,72
9	992609	12" Stainless Steel Pre Slope Drain Channel module system №09	8.05	17.71	120	4,72	125	4,92
10	992610	12" Stainless Steel Pre Slope Drain Channel module system №10	8.27	18.19	125	4,92	130	5,12
11	992611	12" Stainless Steel Pre Slope Drain Channel module system №11	8.32	18.3	130	5,12	135	5,31
12	992612	12" Stainless Steel Pre Slope Drain Channel module system №12	8.36	18.39	135	5,31	140	5,51
13	992613	12" Stainless Steel Pre Slope Drain Channel module system №13	8.58	18.88	140	5,51	145	5,71
14	992614	12" Stainless Steel Pre Slope Drain Channel module system №14	8.80	19.36	145	5,71	150	5,91
15	992615	12" Stainless Steel Pre Slope Drain Channel module system №15	8.85	19.47	150	5,91	155	6,1

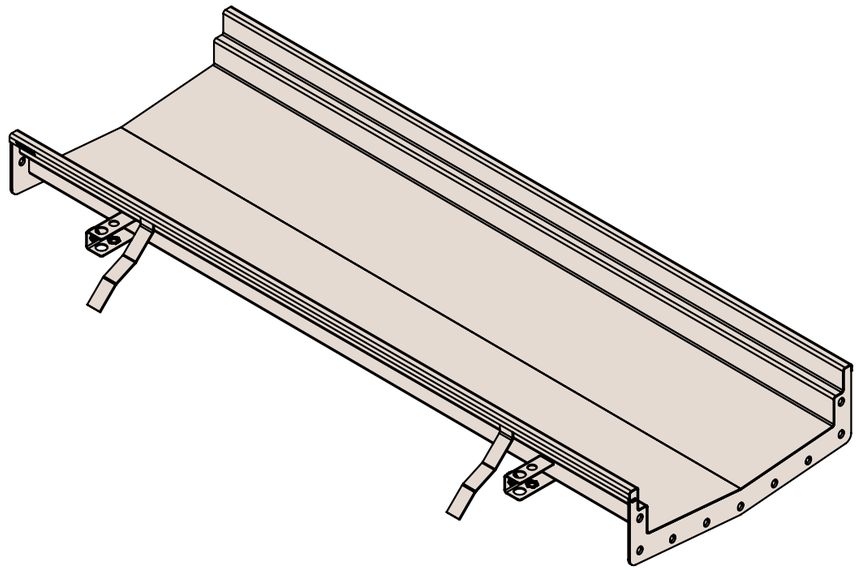

1. *Dimensions for reference, inch [mm]*
2. *Delivery and packaging are carried out in accordance with the terms of the contract*
3. *The manufacturer reserves the right, without notice to the consumer, to make changes to the design of the products for improvement of their technological and operational parameters, which will not affect the quality and properties of the product.*

UNLESS OTHERWISE SPECIFIED:
DIMENSIONS ARE IN MILLIMETERS
SURFACE FINISH:
TOLERANCES: ISO 2768-m
LINEAR:
ANGULAR:

FINISH: Passivation

DEBURR AND BREAK SHARP EDGES

DO NOT SCALE DRAWING

REVISION

VODALAND

	NAME	SIGNATURE	DATE
DRAWN	Halushka		03.09.22
CHK'D	Karetin		
APPV'D			
MFG			
Q.A			

TITLE: 12" Stainless Steel Pre Slope Drain Channel module system №01

MATERIAL: Stainless Steel (AISI 304)

WEIGHT: 15.4 lb /7.00kg

ARTICLE: 992601

A3

SCALE:1:5

SHEET 1 OF 1