GRAPHIC TEMPLATE

SWIFT STEP & REPEAT BACKDROP
10 feet wide x 8 feet high, Straight Backwall

- Total Graphic Area: 122.05" W x 96.46" H
- Total Visual Area: 120.08" W x 94.76" H

Please make sure to include 2" bleed on four sides, please note the trim and sewing area shown. Do NOT design any key elements (logos, text, etc.) within 2" near the edges.

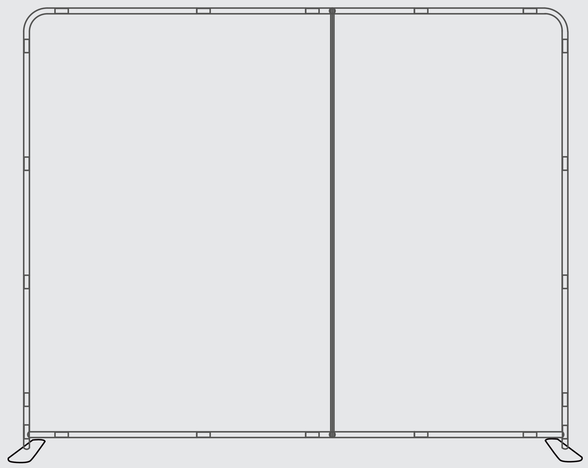

Front view

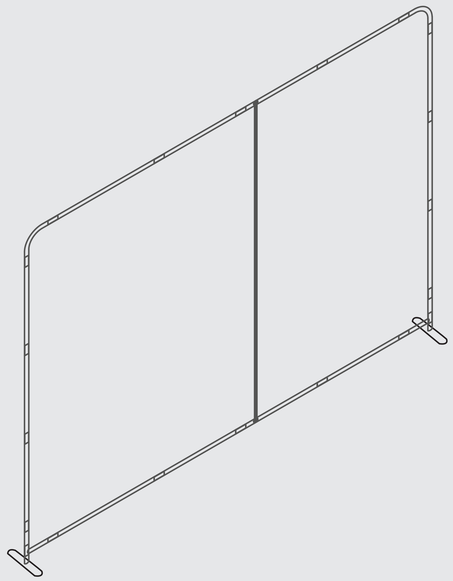

Side view

General Artwork Guidelines:

- Color Mode: CMYK
- Resolution: minimum 100 dpi
- Fonts: All fonts must be outlined
- Pantone Colors: Call out all solid coated pantone colors as spot color in the artwork
- Background images/colors: Must bleed to edge of the artboard
- Images & Support Files: Must be embedded in the artwork
- Do NOT change the size of artboard
- Spot colors on template can not be used in artwork as they won't print

bleed area
trim line
safe zone