Instruction Sheet For VT2 Series

NOTES:
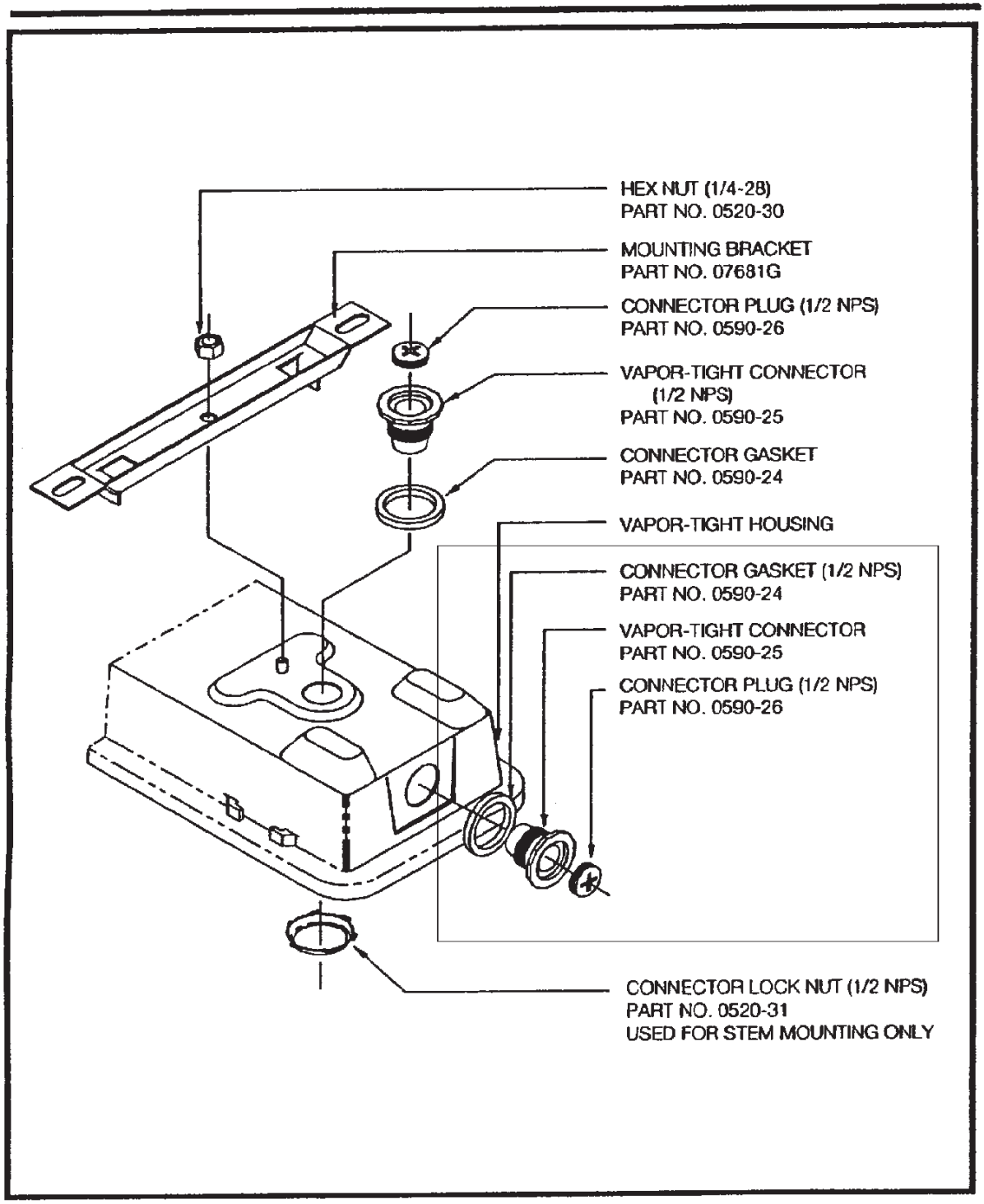
1. CONNECTOR PLUGS MUST BE INSTALLED