HUNZA®
PURE OUTDOOR LIGHTING

SLSQ/L

Step Light Square

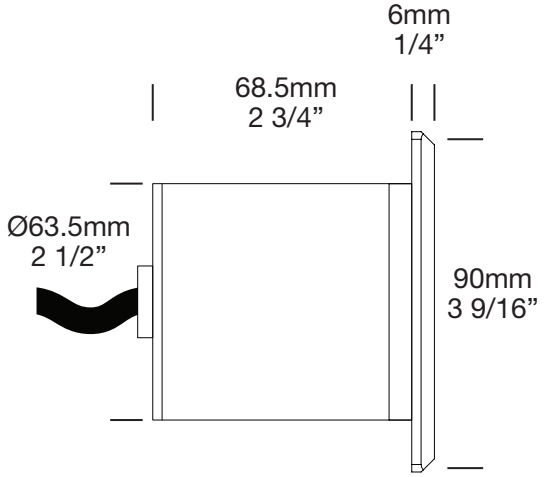

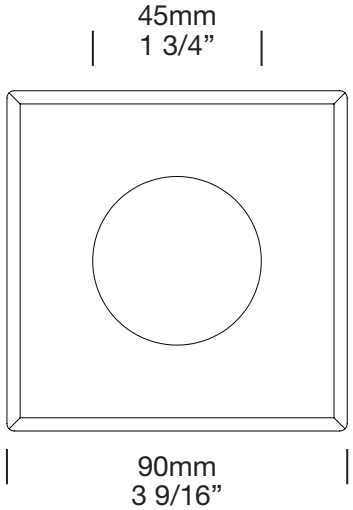

Modification Date: 09/18/23 SLSQ/L Step Light Square 3532

Hunza® Productions Ltd.
130 Felton Mathew Ave
Saint Johns, Auckland 1072
New Zealand
T: +64 9 528 9471
E: info@hunza.co.nz

© Hunza® Productions Ltd 2023
Due to continued product improvements, specifications may change without notification. This document contains proprietary information of Hunza®. Its receipt or possession does not convey any rights to reproduce or disclose its content.

For more information, CAD files, photometric files, and installation instructions, please vist: www.hunzalighting.com/SLSQ-L

1:2 SCALE ON A4