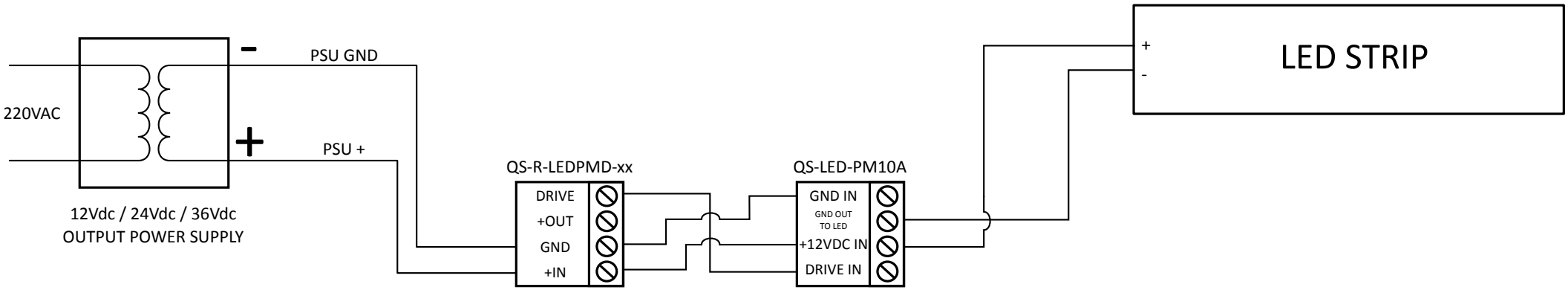
220VAC
-
+
PSU GND
PSU +
12Vdc / 24Vdc / 36Vdc
OUTPUT POWER SUPPLY
QS-R-LEDPMD-xx
DRIVE
+OUT
GND
+IN
QS-LED-PM10A
GND IN
GND OUT
TO LED
+12VDC IN
DRIVE IN
+
-
LED STRIP