Audible Alarm Wiring Diagram

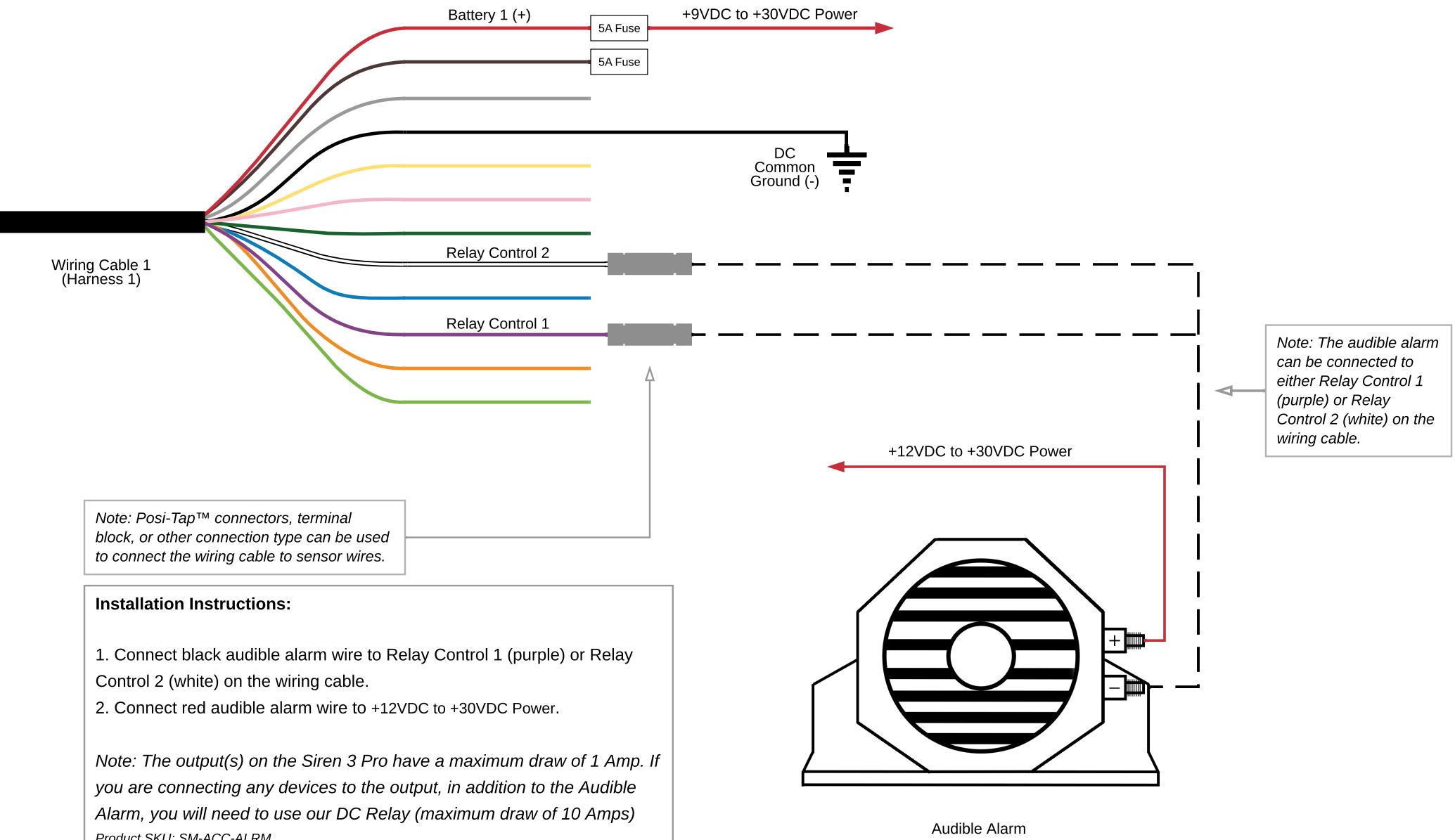

Installation Instructions:

1. Connect black audible alarm wire to Relay Control 1 (purple) or Relay Control 2 (white) on the wiring cable.
2. Connect red audible alarm wire to +12VDC to +30VDC Power.

Note: The output(s) on the Siren 3 Pro have a maximum draw of 1 Amp. If you are connecting any devices to the output, in addition to the Audible Alarm, you will need to use our DC Relay (maximum draw of 10 Amps)

Product SKU: SM-ACC-ALRM

sirenmarine