240V Shore Power Relay Wiring Diagram

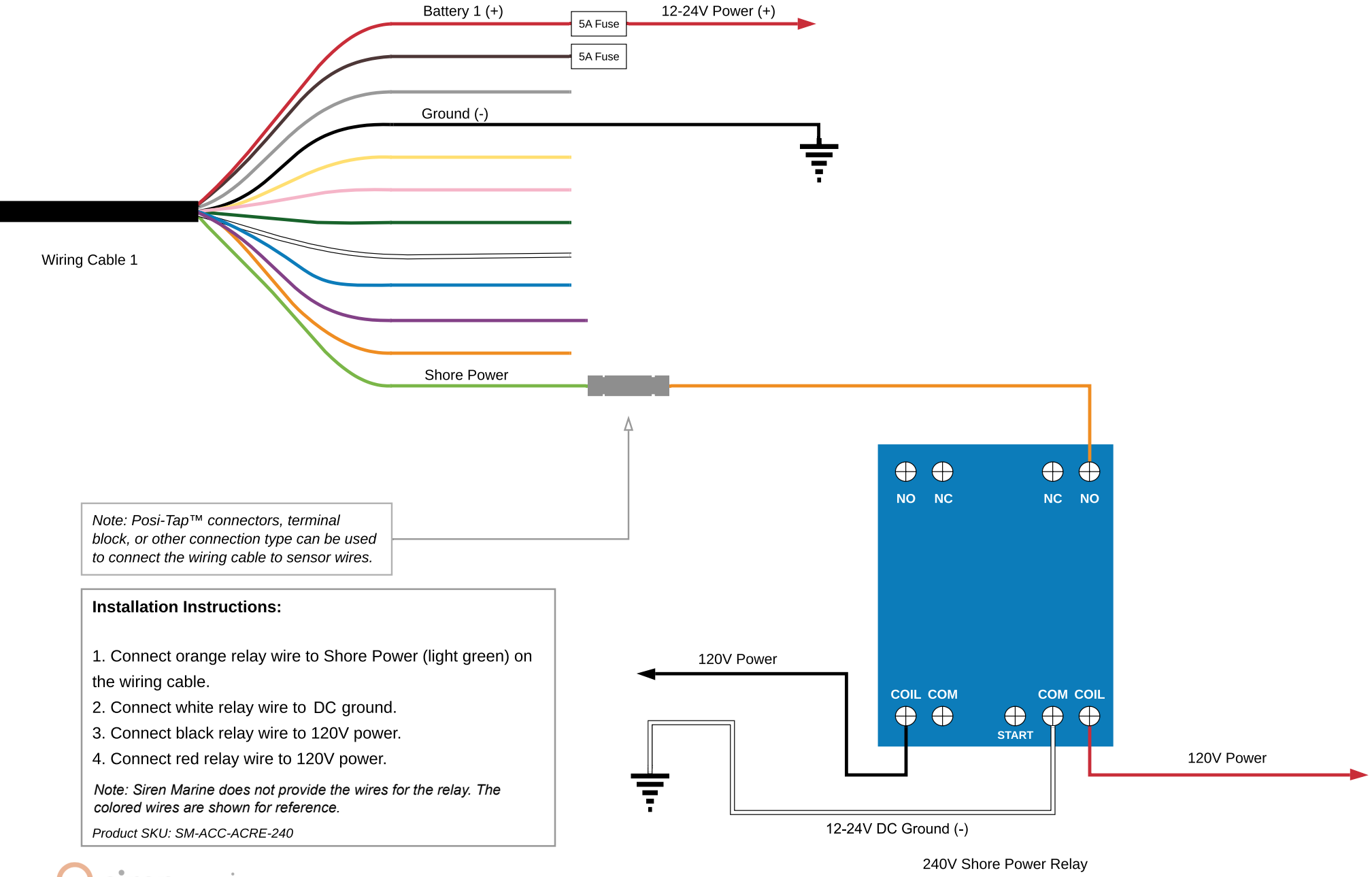

Note: Posi-Tap™ connectors, terminal block, or other connection type can be used to connect the wiring cable to sensor wires.

Installation Instructions:

1. Connect orange relay wire to Shore Power (light green) on the wiring cable.
2. Connect white relay wire to DC ground.
3. Connect black relay wire to 120V power.
4. Connect red relay wire to 120V power.

Note: Siren Marine does not provide the wires for the relay. The colored wires are shown for reference.

Product SKU: SM-ACC-ACRE-240

sirenmarine