CURRENT TRANSFORMER (CT)
SPECIFICATION SHEET INT-CT401-NJ
MEASUREMENT CANADA APPROVAL AE-2566

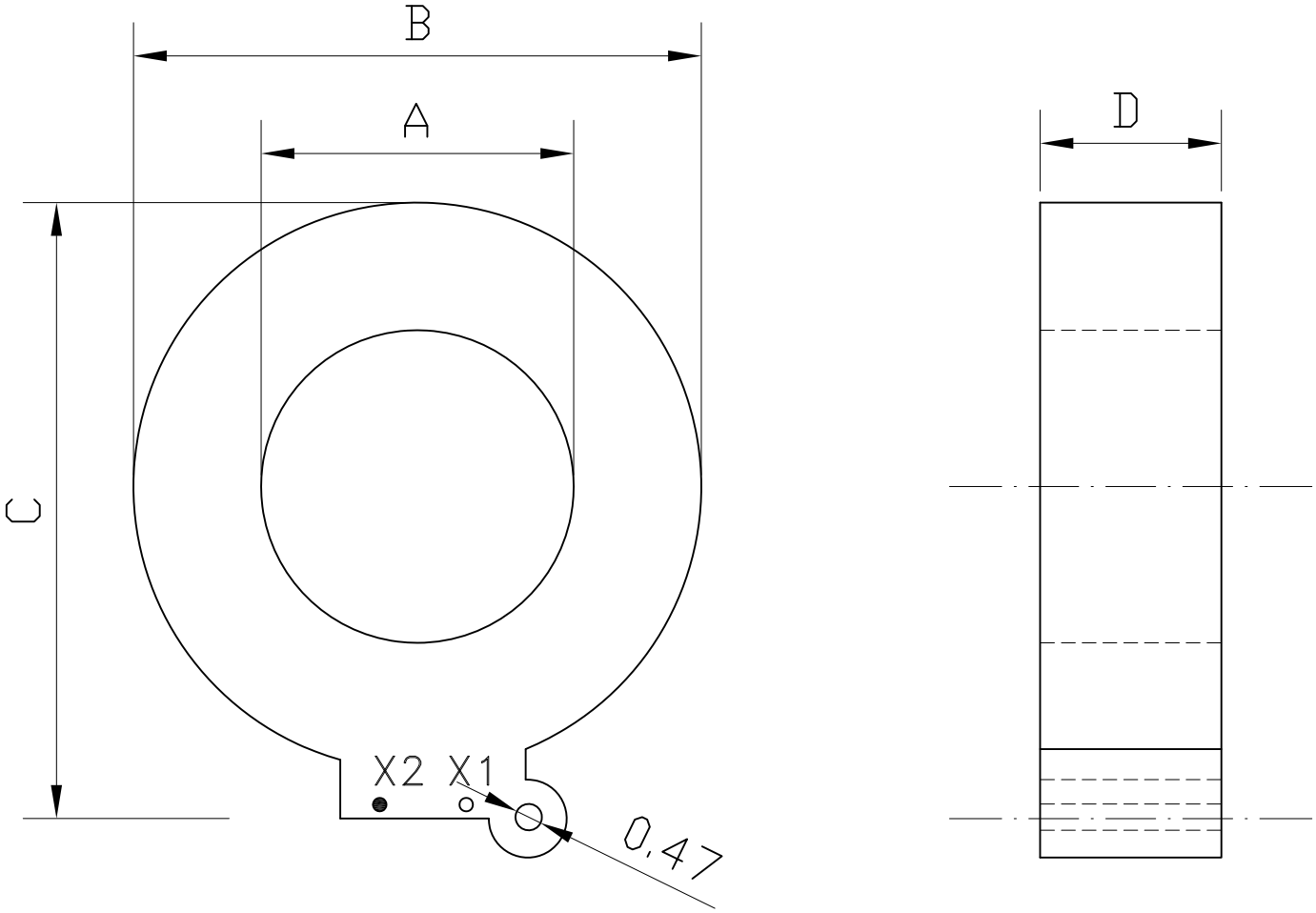

TYPICAL DIMENSION(in)

*CLASS		A	B	C	D
PRIMARY LOAD	SECONDARY CT OUTPUT				
4-400A	Max. 0.1A	1.69	3.07	3.27	0.98

Rated current: 400A
Accuracy class: 0.3 B0.005
Rating factor: 1.25 @ 30°C amb
Frequency: 50/60 Hz
Voltage class: 600V 10KV BIL
Secondary leads: (6ft) X1 (white) and X2 (black)
Twisted #18 AWG 600V rated 105°C temp rating TEW
Housing: UL94-V1 recognized material
Polarization: primary dot on line side
Complete with protection: bilateral switch (secondary 10V max)
Arrow indicates line-to-load direction

intellimeter CANADA INC.
Innovative Metering Solutions
1125 Squires Beach Road
Pickering,Ontario L1W 3T9
Phone:(905) 839-9199
Fax:(905) 839-9198
intellimeter.on.ca

Project Name:	Distributor:	Engineer:	P.O.#	Date:	Rev.	Project#:	Drawing#:	Drawn:	Checked:	Drawing:
				Oct. 22,21				H.P.	H.P.	