# Tonic

American Standard

*TONICCCROUND*

## Round tank, bottom inlet suite

**Recommended use** Domestic, hotel and commercial

### KEY SPECIFICATIONS

- Finish: White
- Material: Pan: Vitreous China, Cistern: Vitreous China, Seat: Polypropylene
- Inlet valve pressure rating: 500kPa
- Inlet position: Bottom inlet
- Outlet type: Universal S & P, P trap (converts to S trap using plastic S bend provided
- Side/ Skew outlet left or right option with M11975 bend
- Rim configuration: Washdown box rim
- S trap set out: 140mm - 160mm
- P trap set out: 190mm
- Toilet seat: Soft close quick release seat

### WARRANTY

- Domestic use - 10 years
- Spare parts & labour - 12 months

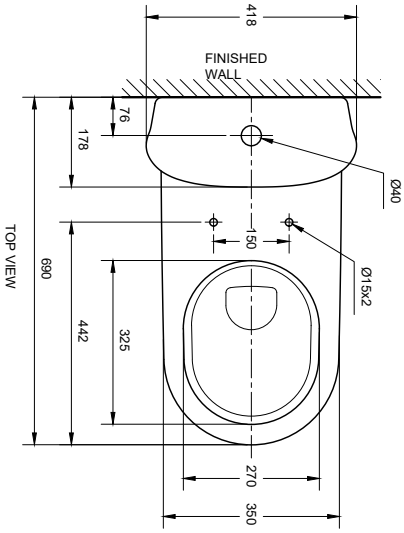


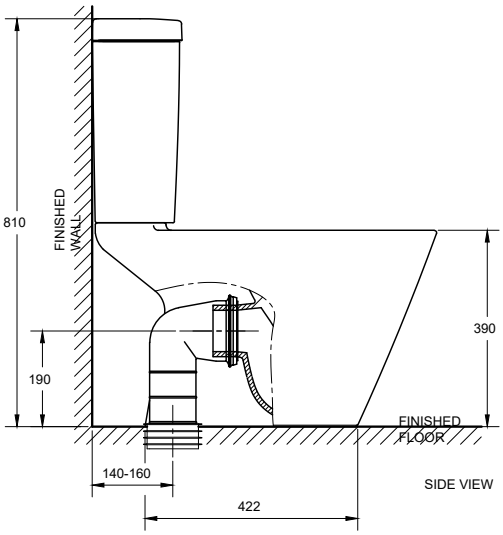


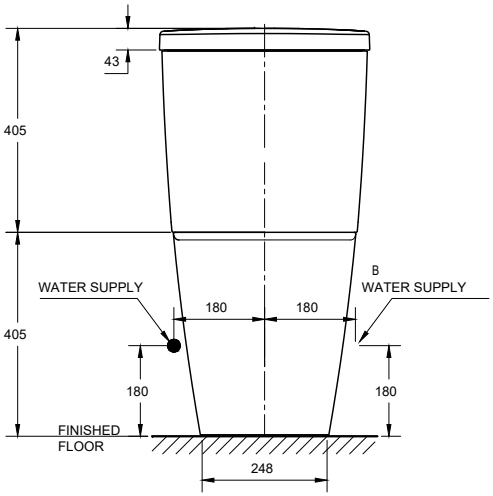


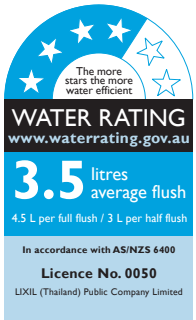


WaterMark
AS 1172
WMKA21024