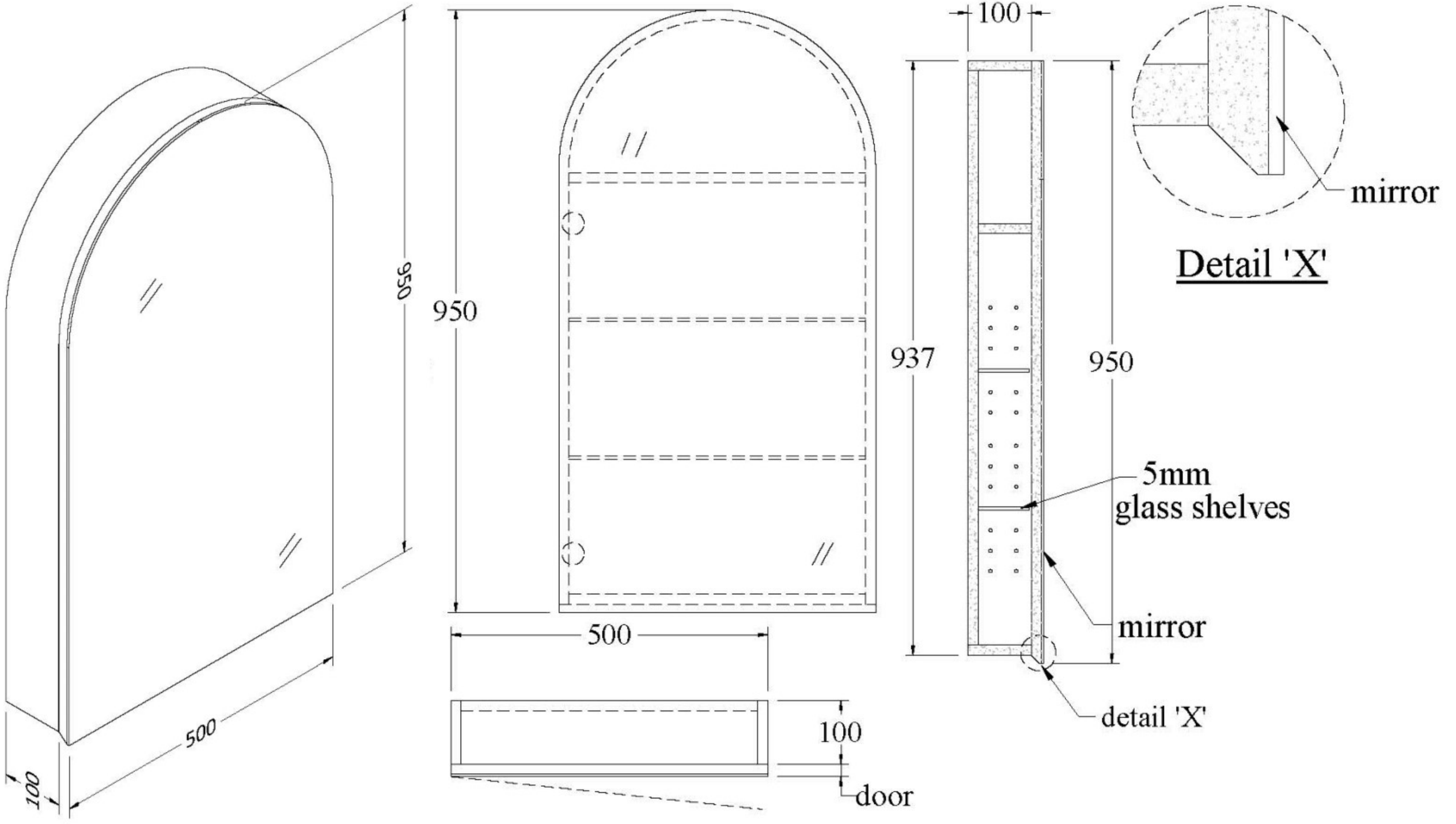
950
500
100
950
500
100
100
937
950
mirror
Detail 'X'
5mm
glass shelves
mirror
detail 'X'
100
door

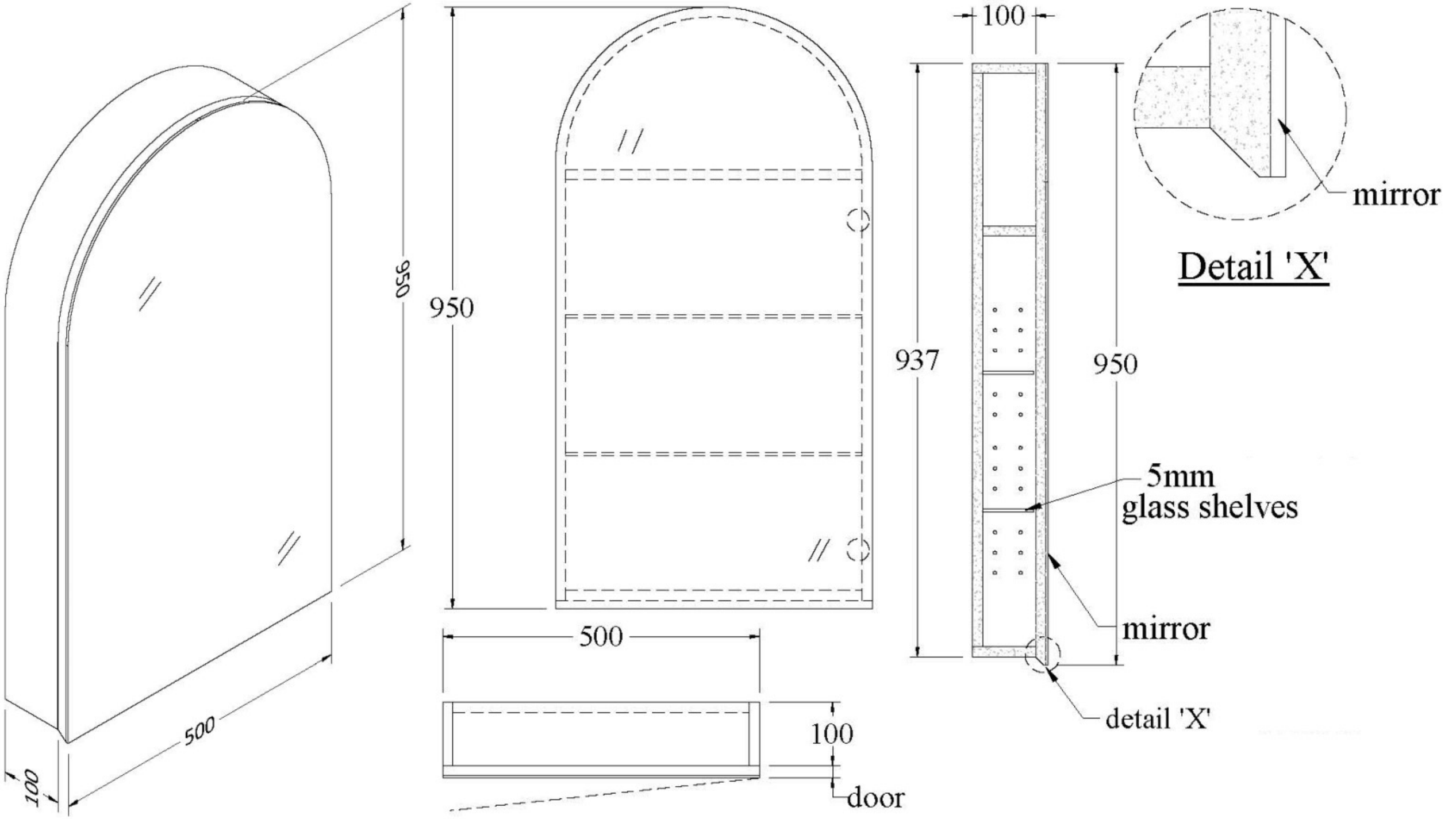
950
500
100
950
500
100
door
100
937
950
5mm
glass shelves
mirror
detail 'X'
mirror
Detail 'X'