mares®

CE

REGULATORS

PROTON 32 METAL - PROTON 12 METAL - PROTON 12
PROTON METAL OCTOPUS - PROTON OCTOPUS

⚠ WARNING

CAREFULLY READ THIS INSTRUCTION MANUAL BEFORE USE, AND KEEP IT FOR FUTURE REFERENCE.

INTRODUCTION

Congratulations. You have purchased one of the finest, most dependable regulators available on the market today. Your Mares regulator has been constructed using manufacturing processes and materials which are the result of fifteen years of continuing research and evolution. This sophisticated technology is backed by the guarantee that every component of your regulator has been tested at our modern facility in Rapallo, Italy. All this is synonymous with reliability, a fundamental requirement for any piece of diving equipment, which you will find in EVERY Mares product.
This manual is intended as a guide for experienced technicians, and not as a comprehensive instruction book on all aspects of diving equipment for inexperienced repair personnel.
MARES periodically offers technical training courses at its factory. Technicians are strongly advised to obtain specific practical training in the servicing of MARES diving equipment before attempting any repairs.
Carefully read all parts of this manual before undertaking any repairs.

Important:

Any critical information or warnings that might affect the performance or result in the injury or death of the technician, regulator owner, or other persons is highlighted with the following symbols:

⚠ DANGER

Indicates an imminently hazardous situation which, if not avoided, will result in death or serious injury.

⚠ WARNING

Indicates a potentially hazardous situation which, if not avoided, could result in death or serious injury.

⚠ CAUTION

Indicates a potentially hazardous situation which, if not avoided, may result in minor or moderate injury. It may also be used to alert against unsafe practices.

MARES reserves the right to modify any products, processes and manufacturing techniques at any time. It is the technicians' responsibility to acquire the latest information and parts from Mares for service and repairs to be performed.

IMPORTANT:

If the instructions provided in the manual are unclear or difficult to understand, please contact Mares before using the regulator or attempting any repairs.

⚠ WARNING

Carefully follow these and all the other instructions concerning your Mares regulator and all other SCUBA equipment. Failure to do so could lead to serious injury or death.

⚠ WARNING

As with all SCUBA equipment, Mares regulators are designed to be used by trained, certified divers only. Failure to fully understand the risks of using such equipment may result in serious injury or death. DO NOT use this regulator or any SCUBA equipment unless you are a trained, certified SCUBA diver.

EC CERTIFICATION

The Mares regulators described in this manual have been tested and certified by Registered Test Centre No. 0426 - Italcert - Viale Sarca 336, Milano - I, in compliance with EC directive 89/686/EEC of 21 December 1989. The test procedures were conducted according to the EN 250: 2000 standard, in conformance with the aforesaid directive which sets out the conditions for marketing and essential safety requirements for Category III Personal Protective Equipment (PPE).
The certification testing results are the following:

Model	Warm water	Cold Water	Marking	Position
	(Temp. = > 10 C (50 F))	(Temp. < 10 C (50 F))		
Proton 32 Metal	Approved	Approved	CE 0426	On the first stage
Proton 12 Metal	Approved	Approved	CE 0426	On the first stage
Proton 12	Approved	Approved	CE 0426	On the first stage
Proton Metal Octopus	Approved	Approved	CE 0426	On the hose
Proton Octopus	Approved	Approved	CE 0426	On the hose

The CE 0426 mark of the Proton Octopus and the Proton Metal Octopus is an adhesive label affixed to the hose. This label must never be removed. If the label is accidentally removed, the applicable CE mark for the Proton Octopus and the Proton Metal Octopus will be the one on the Mares first stage to which it is connected.
The CE mark certifies compliance with the essential health and safety requirements (DE 89/686/EEC Annex II). The suffix 0426 after the letters "CE" indicates the Italcert Registered Test Center in charge of monitoring the production under Art. 11B DE 89/686/EEC.

REFERENCES TO EN 250: 2000 - OBJECT - DEFINITIONS - LIMITS

Object: The requirements and tests provided for in EN 250: 2000 are aimed at providing a minimum safety level for the operation of diving breathing apparatuses at a maximum depth of 50 m / 162 feet.
Scuba - Definition: Self-contained, open-circuit compressed air underwater breathing apparatus is an apparatus which has a portable supply of compressed air carried by the diver, allowing him to breathe underwater.
Scuba - Minimum equipment (EN 250: 2000):

a) Air tank(s).
b) Regulator.
c) Safety device, e.g. pressure gauge/computer, reserve mechanism or alarm.
d) Transport and retaining system, e.g. backpack and/or straps.
e) Facepiece (mouthpiece assembly or full-face mask or diving helmet).
f) User instructions.

⚠ WARNING

SCUBA equipment complying with EN 250 is not intended for breathing by more than one user at the same time.

⚠ WARNING

If SCUBA equipment is configured and used by more than one diver at the same time, the cold water and breathing performance may not fulfill the requirements of EN 250.

Limits (EN 250: 2000)

- **SCUBA - Component Groups (EN 250: 2000):** The SCUBA unit can be made up of separate pieces of equipment such as a tank, regulator and submersible pressure gauge. The Mares regulators described in this manual can be used with other SCUBA unit components certified according to directive EEC/89/686 and EN 250: 2000. The air contained in the tanks must conform to the requirements for breathable air set out in EN 12021.

⚠ WARNING

FOR EUROPEAN COUNTRIES ONLY

Mares regulators and octopus are designed and intended for use only with clean, compressed atmospheric air. Do not use this equipment with any other gas or enriched air.
Failure to adhere to this warning may result in serious injury or death due to fire and explosion or the serious deterioration or failure of the equipment.

⚠ WARNING

FOR NON-EUROPEAN COUNTRIES ONLY

Mares regulators, alternative second stages, and gas delivery components are designed for and compatible with open circuit SCUBA using compressed air or enriched air (Nitrox) mixtures not exceeding 40% Oxygen ONLY.
These limits conform to the DAN Nitrox Industry Workshop Proceedings of November, 2000.
Failure to follow this warning may result in SERIOUS INJURY or DEATH to the user due to fire, explosion, or the deterioration or failure of the equipment.

- Maximum depth: 50 m / 162 feet.
- Pressure max 232 bar (international YOKE CGA 850 adapter) Fig. 1a.
- Pressure max 300 bar (DIN 477/50 screw) Fig. 1b.
- Warm water regulators - water temperature over or equal to +10°C (50°F).
- Cold water regulators - water temperature below +10°C (50°F).
  Under the EN 250: 2000 standard, water is considered to be cold at a temperature below 10°C. To use MARES regulators in cold water conditions, always install the CWD (Cold Water Diving) kit. THE CWD KIT SHOULD ONLY BE INSTALLED BY AN AUTHORIZED MARES SERVICE CENTER.

⚠ WARNING

Attempting to dive in cold water conditions (below +10°C) without adequate training may result in serious injury. Before diving in cold water, it is advisable to take a special training course under the supervision of a certified diving instructor. Because no regulator can be completely guaranteed against freezing of the second stage under all conditions, even Mares regulators fitted with the CWD kit may be subject to "icing" phenomena which can interfere with their correct operation. This may result in serious injury. Therefore, to minimize the potential hazards, it is essential to be adequately trained in the prevention and handling of the problems which may arise from a regulator subject to "icing" phenomena.
Particularly in these situations, the following precautions should be observed:
1) Avoid breathing through the regulator when out of the water.
2) Only press the purge valve underwater, and even then very gently and for brief periods.

- The Proton Octopus and Proton Metal Octopus second stages can only be used with the MR12 and MR32 first stages or with certified Mares regulators.

⚠ WARNING

For safety reasons, it is not advisable to use an Octopus second stage that is not a certified Mares Octopus. The manufacturer declines responsibility for damages to persons or property resulting from the use of different Octopus second stages. The MARES Octopus second stages have been designed and tested for use on first stage low pressure ports OTHER than the preferential port used for the primary second stage. An Octopus second stage MAY NOT be substituted for a primary second stage, and must in no circumstances be connected to the preferential low pressure port intended for the primary second stage.

⚠ WARNING

For safety reasons, the submersible pressure gauge / high pressure safety device that is assembled on the regulator must comply with the EN 250: 2000 standard. According to this regulation, with an upstream pressure of 100 bar the maximum permitted airflow through the connector toward the first stage must not exceed 100 liters/min. If you have a submersible pressure gauge / high pressure safety device that complies with the EN 250: 1993 standard or a different specification, check whether the instruction manual indicates the value of the maximum airflow.
The use of submersible pressure gauges / safety devices that do not comply with the EN 250: 2000 standard, or which do not have an indication of the maximum permitted airflow through the first stage connector may result in serious accidents.

GENERAL WORKING PRINCIPLE

Regulators reduce cylinder pressure, referred to as inlet pressure, to a pressure suitable for breathing. Modern regulators do this in two stages connected by a hose. The first stage provides pressure to the second stage; this reduced pressure remains constant despite the sizeable changes undergone by the cylinder inlet pressure during the dive (dropping from 3000/4350 to few hundred psi). The second stage brings pressure down to ambient pressure and delivers air only when the diver inhales. Each stage of the regulator contains an internal valve. When the diver inhales, the pressure inside the case is lowered and a pressure differential (imbalance) is created across the diaphragm (beginning of inhalation). The response of the diaphragm is to bend inward, contact the lever and open the second stage valve. Air continues to flow into the case until the pressure balance is regained (end of inhalation).

FIRST STAGE

For the second stage to work properly, the first stage must deliver air at a correct and - most importantly - constant intermediate pressure. This characteristic, provided by all Mares first stages, is essential for obtaining optimal adjustment of the second stage and ensuring top performance for the entire duration of the dive, regardless of tank pressure.
All Mares first stages are available with the following types of tank valve fittings: DIN 477/50 screw (max pressure 300 bar), international YOKE CGA 850 adapter (max pressure 232 bar), in accordance with the EN 250: 2000 standard.

SECOND STAGE

The purpose of the second stage is to deliver air at ambient pressure, only during the inhalation phase. The diagram of a second stage shown in Fig. 5 illustrates its operation. When the diver inhales, the pressure inside the second stage decreases, creating a pressure difference (imbalance) between the two sides of the diaphragm. This pulls the flexible diaphragm inward, pressing the demand lever and unseating the second stage valve. This opening allows air to flow in through the second stage and to the diver, until the diver stops inhaling. At this point the internal 2nd stage pressure increases, pushing the diaphragm back in the opposite direction, causing the valve to return to its seat and shutting off the airflow.

MR12 First stage (Fig. 2)

The historic tried-and-tested first stage.
A diaphragm design featuring the DFC (Dynamic Flow Control) system for dynamically balancing the pressure drop during the inhalation phase. Replaceable high-pressure valve seat in corrosion-proof metal. Chrome and nickel-plated body protected by a shockproof elastomer cover. Four LP low-pressure ports and two HP ports for connecting a pressure gauge or the transmitting unit of an air integrated computer.

MR32 First stage (Fig. 3)

The Proton Metal is equipped with the brand new MR32 first stage, which immediately sets itself apart with its distinctive aesthetics and exceptionally light weight for a first stage of this class. Its technical characteristics, with a diaphragm design and DFC system, are those of the famous MR22. The forged brass body with chrome and nickel plated finish is protected by a shockproof and scratch-resistant coating. The brand-new high pressure valve, manufactured in “Tri-material”, allows for superior duration and safety. The four low-pressure and two high-pressure ports are oriented to offer the most sensible arrangement of the hoses to provide maximum comfort for the diver.

“Tri-material” First Stage Valve (patented system)

During operation, the high-pressure valve is subjected to various stresses. In traditional valves, these stresses, associated with extreme usage conditions, cause premature wear of the valve with a consequent drop in reliability, performance, and safety. Mares, after careful study of the forces involved, the pressures that act on the surfaces of the valve, and the usage conditions to which it is subjected, has created the new “Tri-material” valve (brass, soft polyurethane, and “high modulus” polyurethane), found today on all Mares MR version first stages. This innovative technical solution guarantees maximum performance, safety, and duration for Mares first stages.

DFC System

The exclusive Mares DFC system fitted on the MR12 and MR32 first stages minimizes the intermediate pressure drop which occurs in all regulators during the inhalation phase (Fig. 4). This phenomenon is all the more marked when higher airflow is demanded of the regulator. The DFC system substantially reduces breathing effort and inhalation resistance, especially during deep dives and under demanding conditions. The MR12 and MR32 first stages incorporate the DFC system on the preferential LP port for the primary second stage, whereas the operation of the other low pressure ports (for octopus, inflator, etc.) is standard.

CWD Kit

For particularly demanding conditions, such as professional use in cold water, the MR12 and MR32 first stages can be retrofitted with the CWD kit which completely seals off all first stage internal components from contact with the water. The CWD kit should only be installed by an authorized MARES service centre.

Proton second stage

Light weight, ruggedness, high performance and simple construction. These are the distinguishing features of this brand new and ultra-compact second stage. Two-component body for a unique look, coupled with superior mechanical characteristics.
Integrated VAD by-pass system, for effortless, natural breathing under all conditions. Coverplate with ultra-light alloy ring, anodized and incorporating the "mesh-grid" system for maximum performance. "Super-soft" hose and a new orthodontic mouthpiece for unparalleled comfort.

Proton Metal second stage

The most compact metal second stage in the world.
Thanks to the integrated VAD system, it offers top-level performance that vastly exceeds, not only the requirements for CE certification, but the stringent U.S. Navy specifications as well.
Thanks to its "all metal" technology, it is also ideal for diving in very cold water. Indeed, a unique and revolutionary design. The oversized purge button is extremely easy to use, even while wearing thick neoprene gloves. The "mesh grid" system minimizes the likelihood of free-flow in strong currents. The new design exhaust tee, with its streamlined shape, affords superior performance while directing air bubbles further away from the face.

VAD Integrated System (patented)

The Proton and Proton Metal second stages use the Mares exclusive and patented V.A.D. (Vortex Assisted Design) integrated system. This system guarantees a low breathing effort at any depth, so that as the air from the hose passes through the second stage valve, it is routed directly to the mouthpiece via the by-pass tube (Fig. 5). A new version of the VAD system, with the bypass tube incorporated into the technopolymer body of the regulator second stage. This innovative technical development ensures great ease of breathing in an exceptionally compact and lightweight second stage.

Proton Octopus / Proton Metal Octopus

The second stage of the Octopus version is equipped with a hose of considerable length (100 cm (39in.) / 90 cm junior (35in.)). It is immediately identifiable in any condition by its yellow color.

Technical specifications **FIRST STAGE**

	MR12	MR32
Operation	- Balanced diaphragm - DFC system - “Tri-material” Valve	- Balanced diaphragm - DFC system - “Tri-material” Valve
Materials		
Metal parts	- Chrome and nickel-plated brass - Stainless steel	- High-resistance molded brass - chrome and nickel-plated brass - Stainless steel
Non-metal parts	- High-resistance technopolymers - Polyurethane	- High-resistance technopolymers - Polyurethane
Seals and diaphragms	- Nitryl rubber - Silicone rubber	- Nitryl rubber - Silicone rubber
Flow rate (air supply 180 bar)	- 4000 l/min	- 4800 l/min
Intermediate pressure		
Air supply 300 bar	- from 9.8 to 10.2 bar (142-148 psi)	- from 9.8 to 10.2 bar (142-148 psi)
Air supply 200 bar	- from 9.8 to 10.2 bar (142-148 psi)	- from 9.8 to 10.2 bar (142-148 psi)
Air supply 30 bar	- from 9.8 to 10.2 bar (142-148 psi)	- from 9.8 to 10.2 bar (142-148 psi)
First stage ports		
High pressure	- 2 7/16” UNF	- 2 7/16” UNF
DFC	- 1 3/8” UNF (primary)	- 1 3/8” UNF (primary)
Intermediate pressure	- 3 3/8” UNF	- 3 3/8” UNF
Weight		
INT	- 686 g	- 856 g
DIN	- 693 g	- 656 g

Technical specifications **SECOND STAGE**

	PROTON - PROTON OCTOPUS	PROTON METAL PROTON METAL OCTOPUS
Operation	- VAD system - mesh-grid cover - Ultralight Bi-Component Technology	- VAD system - mesh-grid cover - All Metal Technology
Materials		
Metal parts	- Chrome and nickel-plated brass - Stainless steel	- Chrome and nickel-plated brass - Stainless steel
Non-metal parts	- High-resistance technopolymers	- High-resistance technopolymers
Seals and diaphragms	- Nitryl rubber - Silicone rubber	- Nitryl rubber - Silicone rubber
Flow rate (air supply 180 bar)	- 2400 l/min	- 2400 l/min
Hose type		
Standard	- “Super Soft” 3/8”	- “Super Soft” 1/2”
Octopus	- “Super Soft” 3/8”	- “Super Soft” 3/8”
Hose length		
Standard	- 80 cm (31 in.)	- 80 cm (31 in.)
Octopus	- 100 cm (39 in.)	- 100 cm (39 in.)
Weight	- 175 g	- 243 g

OPERATION AND MAINTENANCE

⚠ WARNING

DO NOT attempt to use any kind of adaptor to connect the LP hose to the HP port, as this may lead to serious injury. The LP components are not designed for use with pressures higher than 20 bar.

Connecting accessories to the first stage

The hoses and accessories should be connected in such a way as to avoid damaging the O-ring. Use a suitable wrench to remove the plug from the first stage port, and screw the terminal fitting of the hose firmly but gently into the first stage port.

⚠ WARNING

The regulator in and of itself is not a complete SCUBA unit, but only one of its components. Under the EN 250: 2000 standard, a complete SCUBA unit must include at least the following minimum equipment:

a) Air tank(s).
b) Regulator.
c) Safety device, e.g. pressure gauge/computer, reserve mechanism or alarm.
d) Transport and retaining system, e.g. backpack and/or straps.
e) Facepiece (mouthpiece assembly or full-face mask or diving helmet).
f) User instructions.

Your Mares regulator has been designed for use in conjunction with other SCUBA unit components conforming to the EEC/89/686 directive and certified with the EC mark. The air inside the tanks must conform to the requirements for breathable air set out in EN12021.

BEFORE ASSEMBLING THE COMPONENTS OF YOUR SCUBA UNIT, CAREFULLY READ ALL THE USER INSTRUCTIONS AND ANY WARNINGS WHICH THEY CONTAIN.

PRE-DIVE CHECKLIST

- Ensure that all the hoses have been correctly assembled onto the 1st stage, and check them for cuts, signs of wear or other damage. If the hoses are loose enough to be unscrewed manually, they must be tightened with a wrench before being pressurised.
- Make sure that the first and second stages do not show signs of damage.
- Position the tank control valve so that the valve opening is directed towards the diver.
- Remove the dust cap from the regulator yoke and position the A-clamp or DIN fitting so that it is centered on the tank valve opening.
- The first stage should be oriented in such a way that the hose leading to the second stage is routed over the diver's right shoulder.
- Tighten the yoke nut finger tight only, being careful not to damage the O-Ring on the tank valve.
- Check the submersible pressure gauge, making sure that the pressure reading is zero.
- Very slowly open the tank valve, allowing air to enter the regulator gradually.
- Do not turn the first stage connected to the tank when the system is pressurized!

⚠ WARNING

When opening the air valve, press the purge valve of the second stage. This helps to reduce the impact on the valve (Fig. 6). DO NOT PERFORM THIS OPERATION AT AMBIENT TEMPERATURES BELOW 10°C (50°F). COLDER TEMPERATURES MAY RESULT IN ICING OR FREE-FLOW.

- Check the pressure gauge to ensure that it indicates the proper cylinder pressure for your planned dive.
- Check the cylinder and regulator connection for leakage. If leakage exists, it may be caused by incorrectly mounting the regulator on the valve or by a damaged cylinder valve O-ring.
- To confirm that the regulator delivers air properly, first exhale through the mouthpiece to blow any foreign matter from the second stage, then inhale. A few breathing cycles should indicate if there are any obvious problems that cannot be discovered by actually breathing from the regulator while underwater.

DURING THE DIVE

- If you are using a second stage as an Octopus regulator, the dust cap should be used to prevent foreign matter from entering the second stage through the mouthpiece.
- When the regulator is out of the diver's mouth, free flowing of air may occur. This inconvenience may be easily eliminated by turning the regulator downward and lightly shaking it to fill it with water (Fig. 7). Should free flow continue, abort the dive immediately.

POST-DIVE CARE AND PERIODIC MAINTENANCE

Ideally, your regulator should be rinsed with fresh water while pressurized. This allows the second stage to be rinsed internally without introducing contaminants into critical sealing areas. Rinse the first stage and also run water into the mouthpiece of the second stage and out of the exhaust tees to remove foreign matter.
If the regulator is not pressurized, do not depress the purge button while rinsing. Actuation of the purge function may allow particles to contaminate the valve seat and cause leakage.
In order to avoid filter and first stage contamination, prevent water from entering the first stage air inlet. Cover the first stage filter with the special dust cup (Fig. 8). Allow the regulator to dry completely before storage.
Prolonged storage in direct sunlight or in oily or dusty areas can be damaging to some of the regulator components.
Do not use lubricants. Lubricants should never be used in routine care and maintenance.

⚠ WARNING

Proper operation of your regulator also depends on appropriate maintenance. Therefore, your regulator should be submitted to a Mares authorized service center for inspection at least once a year. In particular, the first stage valve should be replaced every two years or every 200 hours of diving.

WARRANTY

Regarding the terms and conditions of the warranty, we invite you to consult the warranty certificate found in the package of your regulator.

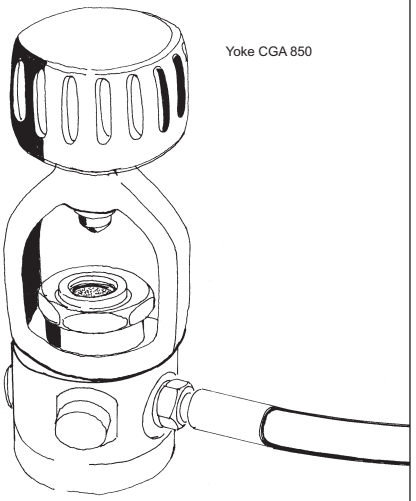

1a

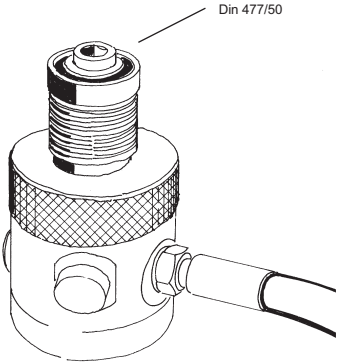

1b

Primo stadio MR12
MR12 first stage
Erste Stufe MR12
Premier étage MR12
Primera etapa MR12
Primeiro estágio MR12

Eerste trap MR12
MR12 förstasteg
Πρώτο στάδιο MR12
MR12- paineenalennin
Pierwszy stopień MR12
MR12 első lépcső

Filtro filter
filter Filter
filter φίλτρο
Filtre suodatin
Filtro Filtr
Filtro szűrő

Camera di compensazione
Compensation chamber
Kompensationskammer
Chambre de compensation
Cámara de compensación
Câmara de compensação
Hogedrukkamer
Kompensationskammare
Θάλαμος αντιστάθμισης
Tasauskammio
Komora kompensacyjna
Kiegyenlítőkamra

Sede valvola alta pressione
HP seat connector
Hochdruck-(HP)ventilsitz
Siège haute pression
Asiento de la válvula de alta presión
Assento válvula alta pressão
Hogedrukklepzitting
HP-säteskoppling
Σύνδεσμος βάσης HP
Korkeapaineistukan vastakappale
Złącze gniazda HP
Nagynyomású csatlakozóaljzat

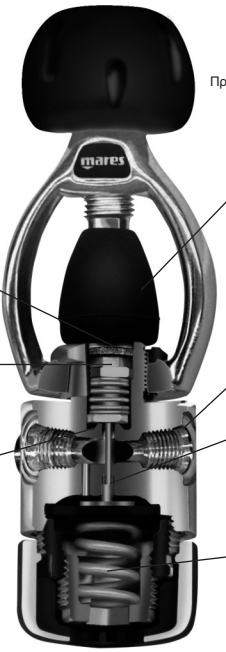

Tappo di protezione
Dust cap
Schutzkappe
Capuchon de protection
Tapón de protección
Stofkap
Dammskydd
Προστατευτικό καπάκι κατά της σκόνης
Pölysuoja
Kapturek ochronny
Porsapka

Uscita LP 3/8” UNF
3/8” UNF LP port
3/8" UNF Mitteldruck-(LP)anschluß
Sortie LP 3/8" UNF
Salida LP 3/8" UNF
Saída LP 3/8" UNF
3/8” UNF lagedrukpoort
3/8” UNF LP- port
3/8” UNF έξοδος LP
Matalapaine-ulosotto 3/8” UNF-kierteellä
Port UNF LP 3/8”
3/8” UNF LP csatlakozó

Spillo di spinta
Thrust pin
Ventilstift
Pointeau
Disco de empuje
Pino de empuxo
Spindel
Tryckstift
Ωστικός πείρος
Venttiilin neula
Trzpień zaworu
Nyomó csapszeg

Molla principale
Main spring
Hauptfeder
Ressort de membrane
Muelle principal
Mola principal
Veer
Huvudfjäder
Κύριο ελατήριο
Pääjousi
Główna sprężyna
Fő rugó

2

PRIMO STADIO
PROTON FIRST STAGE
ERSTE STUFE PROTON
PREMIER ÉTAGE PROTON
PRIMERA ETAPA PROTON
PRIMEIRO ESTÁGIO PROTON
EERSTE TRAP PROTON
PROTON-FÖRSTASTEG
ΠΡΩΤΟ ΣΤΑΔΙΟ PROTON
PROTON PAINEENALENNIN
PIERWSZY STOPIEŃ PROTON
PROTON ELSŐ LÉPCSŐ

Spillo di spinta
Thrust pin
Ventilstift
Pointeau
Disco de empuje
Pino de empuxo
Spindel
Tryckstift
Ωστικός πείρος
Venttiilin neula
Trzpień zaworu
Nyomó csapszeg

Molla principale
Main spring
Druckfeder Membrane
Ressort de membrane
Muelle principal
Mola principal
Veer
Main spring
Κύριο ελατήριο
Pääjousi
Główna sprężyna
Fő rugó

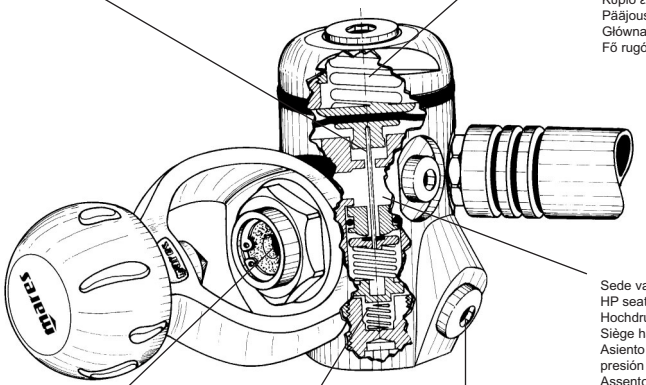

Sede valvola alta pressione
HP seat connector
Hochdruck-(HP)ventilsitz
Siège haute pression
Asiento de la válvula de alta presión
Assento válvula alta pressão
Hogedrukklepzitting
HP-säteskoppling
Σύνδεσμος βάσης HP
Korkeapaineistukan vastakappale
Złącze gniazda HP
Nagynyomású csatlakozóaljzat

Filtro conico
Tapered filter
Sinterfilter
Filtre conique
Filtro cónico
Filtro cônico
Sinterfilter
Balanskammare
Διαβαθμισμένο φίλτρο
Kartiomallinen suodatin
Filtr stożkowy
Kúpos szűrő

Camera bilanciamento
Balancing chamber
Hochdruckkammer
Chambre de compensation
Cámara de compensación
Câmara de balanceamento
Hogedrukkamer
Avsmalnat filter
Θάλαμος εξισορρόπησης
Tasapainotuskammio
Komora równoważąca
Kiegyenlítőkamra

Uscita LP 7/16" UNF
7/16" UNF LP port
7/16" UNF Mitteldruck-(LP) Anschluss
Salida LP 7/16" UNF
Saída LP 7/16" UNF
7/16" UNF lagedrukpoort
7/16" UNF LP-port
Έξοδος LP 7/16" UNF
Matalapaine-ulosotto 7/16" UNF-kierteellä
Port UNF LP 7/16"
7/16" UNF LP csatlakozó

3

Differenza della caduta della pressione intermedia in fase inspiratoria
Difference in intermediate pressure drop during inhalation
Unterschiede im Mitteldruckabfall während der Einatemphase
Comparaison de la chute de la moyenne pression à l'inspiration
Diferencia del descenso de la presión intermedia durante la fase de inspiración
Diferença de queda da pressão intermediária em fase de inspiração

Verschil in terugval middendruk tijdens inademing
Skillnad i mellantryck under inandning
Διαφορά στην πτώση της ενδιάμεσης πίεσης κατά την εισπνοή
Välipaineen muutos sisäänhengityksen aikana
Różnica w spadku średniego ciśnienia podczas wdechu
A középnyomás-esés különbsége belégzés közben

Primo stadio tradizionale
Traditional first stage
Herkömmliche erste Stufe
Premier étage classique
Primera etapa tradicional
Primeiro estágio tradicional
Traditionele eerste trap
Traditionellt förstasteg
Κλασικό πρώτο στάδιο
Perinteinen paineenalennin
Tradycyjny pierwszy stopień
Hagyományos első lépcső

Primo stadio con D.F.C.
D.F.C. first stage
DFC erste Stufe
Premier étage D.F.C.
Primera etapa con DFC
Primeiro estágio com D.F.C.
Eerste trap met D.F.C.
D.F.C. förstasteg
Πρώτο στάδιο D.F.C.
D.F.C. -paineenalennin
Pierwszy stopień D.F.C.
D.F.C. első lépcső

4

SECONDO STADIO
SECOND STAGE
ZWEITE STUFE
DEUXIEME ETAGE
SEGUNDA ETAPA
SEGUNDO ESTÁGIO
TWEEDE TRAP
ANDRASTEG
ΔΕΥΤΕΡΟ ΣΤΑΔΙΟ
ANNOSTIN
DRUGI STOPIEŃ
MÁSODIK LÉPCSŐ

Membrana
Diaphragm
Membran
Membrane
Membrana
Diafragma

Membraan
Membran
Διάφραγμα
Kalvo
Membrana
Membrán

Pressione dell'acqua
Water pressure
Umgebungsdruck
Pression de l'eau
Presión del agua
Pressão da água
Waterdruk
Vattentryck
Πίεση νερού
Veden paine
Ciśnienie wody
Víznyomás

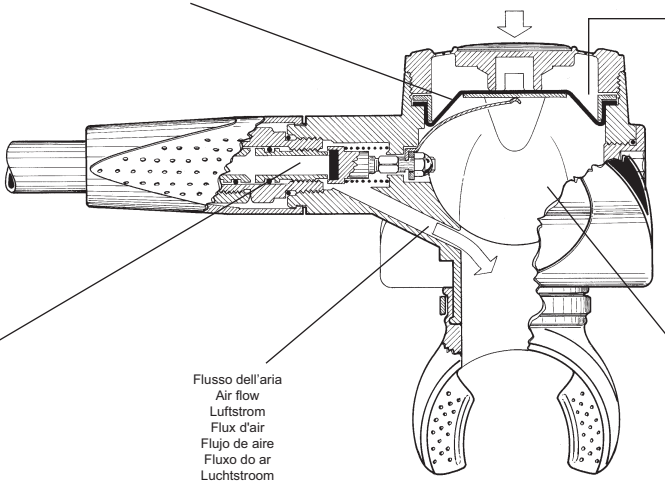

Pressione intermedia
Intermediate pressure
Mitteldruck
Moyenne pression
Presión intermedia
Pressão intermediária
Middendruk
Medeltryck
Ενδιάμεση πίεση
Välipaine
Średnie ciśnienie
Középnyomás

Flusso dell'aria
Air flow
Luftstrom
Flux d'air
Flujo de aire
Fluxo do ar
Luchtstroom
Luftström
Ροή αέρα
Ilmavirta
Przepływ powietrza
Légáramlás

Bassa pressione
Low pressure area
Niederdruckbereich
Basse pression
Baja Presión
Baixa pressão
Lage druk
Lågtrycksområde
Περιοχή χαμηλής πίεσης
Matalapainealue
Strefa niskiego ciśnienia
Kisnyomású zóna

5

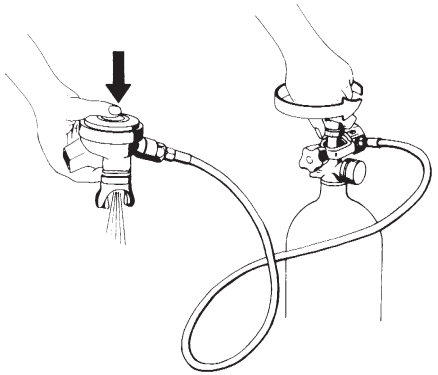

6

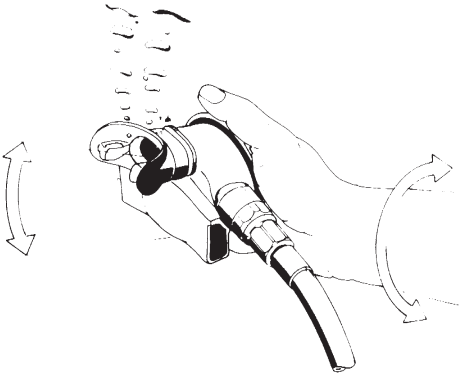

7

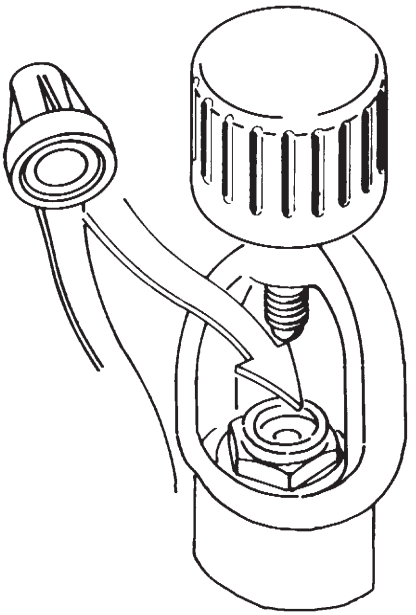

8