OVERALL & WALL STUD DIMENSIONS

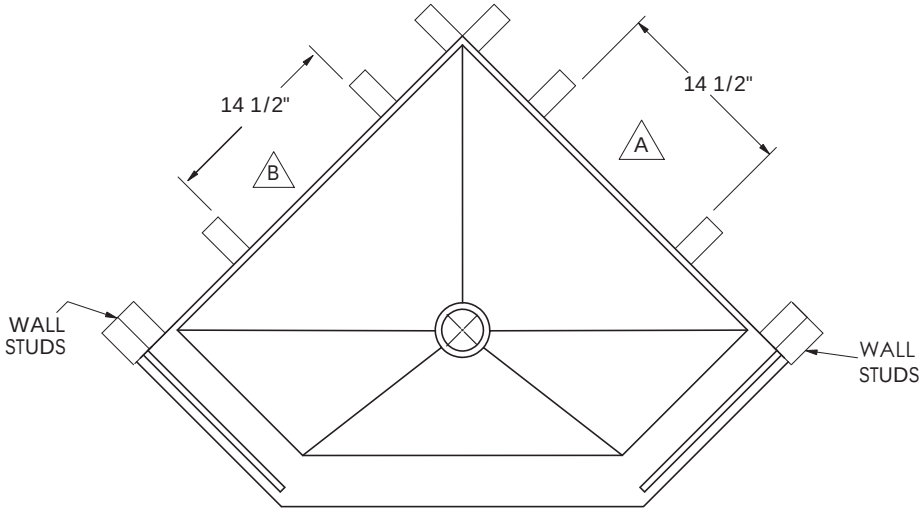

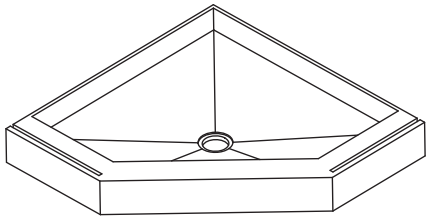

SCALE 1:20

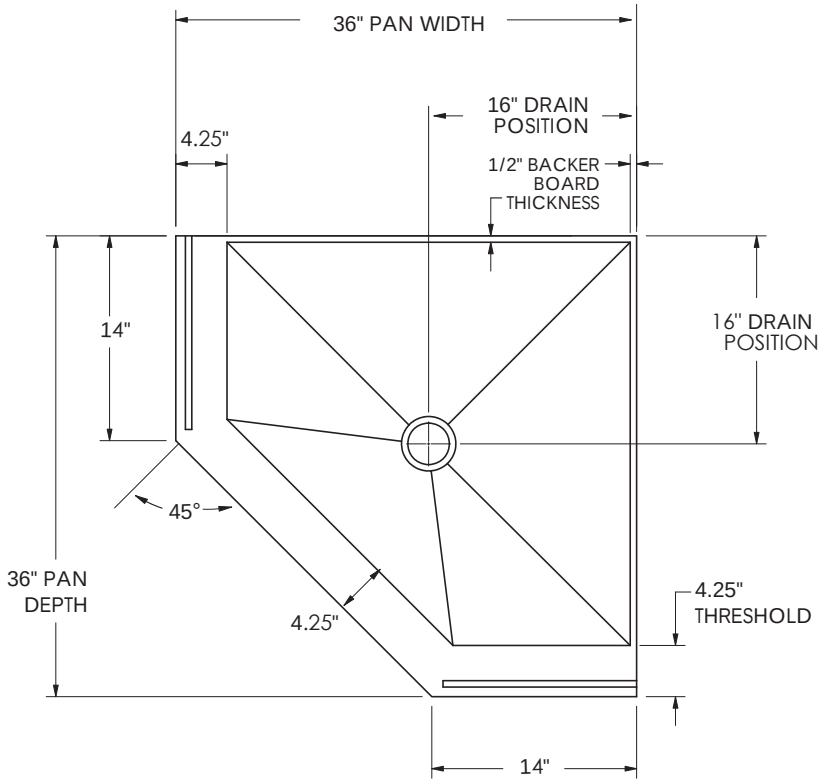

NOTES:

A MINIMUM GAP REQUIRED FOR SHAMPOO SHELF.

B MINIMUM GAP REQUIRED FOR SHAMPOO SHELF.

C DO NOT USE ANY PRODUCT SPECIFICATIONS TO BEGIN INSTALLATION BEFORE RECEIVING PRODUCT. THESE SPECIFICATION SHEETS ARE FOR REFERENCE ONLY. USE ACTUAL PRODUCT MEASUREMENTS ONLY. (OVERALL DIMENSION TOLERANCE IS +/- 1/4")

PROPRIETARY AND CONFIDENTIAL

THE INFORMATION CONTAINED IN THIS DRAWING IS THE SOLE PROPERTY OF AMERICAN BATH FACTORY. ANY REPRODUCTION IN PART OR AS A WHOLE WITHOUT THE WRITTEN PERMISSION OF AMERICAN BATH FACTORY IS PROHIBITED.

ATTRIBUTES			
SOURCE	MAKE	VOLUME	-
COLOR	NATURAL	MASS	-
MATERIAL	STONE		
DO NOT SCALE DRAWING			

UNLESS OTHERWISE SPECIFIED, DIMENSIONS ARE IN INCHES TOLERANCES ARE:

X.X = ± 0.1
X.XX = ± 0.05
X.XXX = ± 0.010

FRACTIONAL± 1/16"
ANGULAR: ± 1/2°

	NAME	DATE
DRAWN	JA	4/9/2018
CHECKED		
ENG APPR.		

AMERICAN BATH FACTORY

SHOWER PAN SPECS, NEO-ANGLE 36 X 36-LC

SIZE	PRT. NO.	REV
A	N363604-LC	F

SCALE: 1:15 | FINISH: ALL | SHEET 1 OF 1