Forced releasing PFR-TSA/TSAg

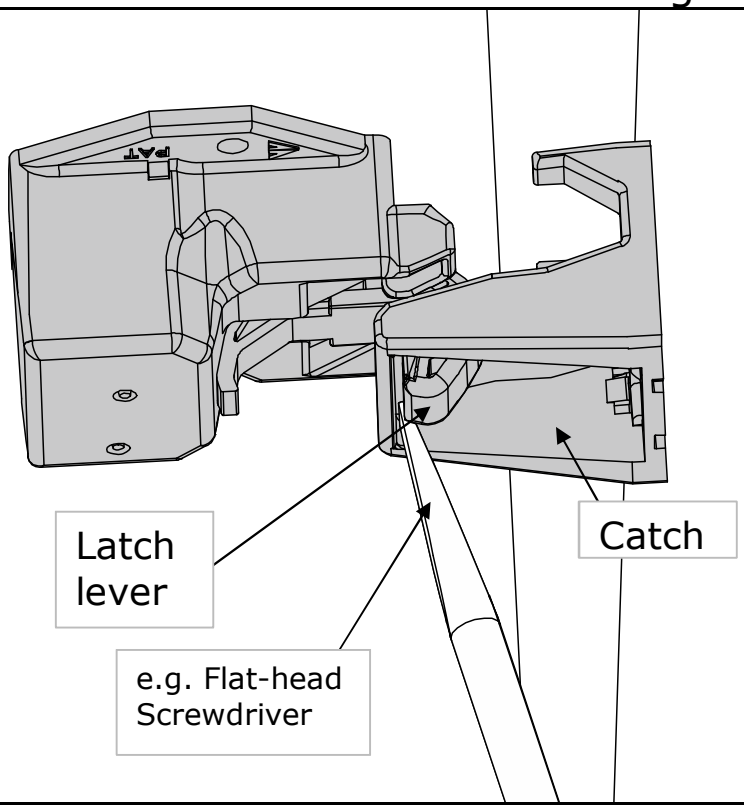

STEP 1

If installed correctly, about a 15mm clearance is provided between the cabinet door and cabinet when the Latch lever locks onto the Catch. Try sticking a Flat-head Screw-driver into the clearance, pushing the Latch lever to release the Catch.

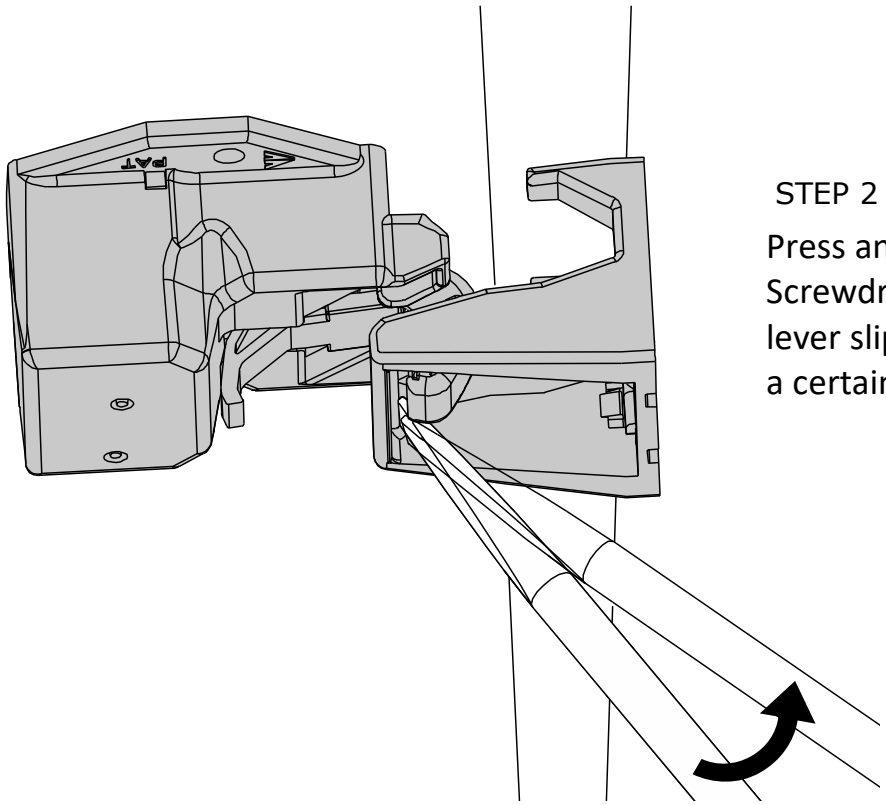

STEP 2

Press and squeeze the tip of Screwdriver, until the Latch lever slips out from the Catch at a certain point.

Created: 6/4/19