Owner's Operation and Instruction Manual

MODEL: 3000 (L), (LN)

CERTIFIED FOR USA and CANADA
SAFETY TESTED TO UL 1482-2010 and ULC-S627-2000
WASHINGTON STATE APPROVED

U.S. Environmental Protection Agency
Certified to comply with 2015 particulate emissions standards.

CAUTION!
Please read this entire manual before you install or use your new room heater. Failure to follow instructions may result in property damage, bodily injury, or even death.

Improper Installation Could Void Your Warranty!

SAFETY NOTICE:
If this heater is not properly installed, a house fire may result. For your safety, follow the installation instructions. Never use make-shift compromises during the installation of this heater. Contact local building or fire officials about permits, restrictions and installation requirements in your area.

SAVE THESE INSTRUCTIONS
THIS MANUAL WILL HELP YOU TO OBTAIN EFFICIENT, DEPENDABLE SERVICE FROM THE HEATER, AND ENABLE YOU TO ORDER REPAIR PARTS CORRECTLY. KEEP IN A SAFE PLACE FOR FUTURE REFERENCE.

French version is available for download from the United States Stove Company website: http://www.usstove.com/
La version française est disponible pour téléchargement à partir du site United States Stove Company: http://www.usstove.com/

United States Stove Company
227 Industrial Park Road
P.O. Box 151
South Pittsburg, TN 37380

851879 E-1910E

CONGRATULATIONS!

You've purchased a heater from North America's oldest manufacturer of wood burning products.

By heating with wood you're helping to CONSERVE ENERGY!

Wood is our only Renewable Energy Resource. Please do your part to preserve our wood supply. Plant at least one tree each year. Future generations will thank you.

The instructions pertaining to the installation of your wood stove comply with UL-1482 and ULC-S627 standards.

This manual describes the installation and operation of the Country Hearth, 3000 wood heater. This heater meets the 2015 U.S. Environmental Protection Agency's crib wood emission limits for wood heaters sold after May 15, 2015. Under specific test conditions this heater has been shown to deliver heat at rates ranging from 11,624 to 38,140 Btu/hr.
Note: The BTU ratings mentioned above are based on the EPA test protocol burning dimensional Douglas Fir lumber. Our advertised BTU's are based on the first hour of operation at high burn rate burning cordwood.

Combustible :	Wood
Colors :	Metallic Black
Flue Pipe Diameter :	6" (152.5mm)
Flue Pipe Type: (Standard Single Wall):	Black or Blued Steel 2100°F (650°C)
Minimum Chimney Height :	12' (3.7m)
Maximum Log Length :	21" (533.5mm)
Dimensions	
Overall : Depth x Width x Height :	29 $^{1}/_{2}$" x 27" x 28 $^{5}/_{8}$" (749mm x 686mm x 727mm)
Combustion Chamber : Width x Depth :	22 $^{3}/_{4}$" x 21" (578mm x 533mm)
Volume : Cubic Feet:	3.11 ft^3 (.0881m^3)
Door Opening : Width x Height:	16" x 8" (406.5mm x 203mm)
Pyroceramic Glass Door : (Viewing) Width x Height:	13 $^{13}/_{16}$" x 8 $^{3}/_{8}$" (351mm x 213mm)
Weight (lbs):	375 lbs (170kg)

CAUTIONS:

- HOT WHILE IN OPERATION. KEEP CHILDREN, CLOTHING AND FURNITURE AWAY. CONTACT MAY CAUSE SKIN BURNS.
- DO NOT USE CHEMICALS OR FLUIDS TO IGNITE THE FIRE.
- DO NOT LEAVE THE STOVE UNATTENDED WHEN THE DOOR IS SLIGHTLY OPENED.
- DO NOT CONNECT TO ANY AIR DISTRIBUTION DUCT OR SYSTEM.
- ALWAYS CLOSE THE DOOR AFTER THE IGNITION.

CUT HERE

WARRANTY INFORMATION CARD

Name_____ Telephone #: (_____)_____

City_____ State_____ Zip_____

Email Address _____

Model # of Unit_____ Serial #_____

Fuel Type: ❑Wood ❑Coal ❑Pellet ❑Gas ❑Other _____

Place of Purchase (Retailer)_____

City_____ State_____ Zip_____

If internet purchase, please list website address_____

Date of Purchase _____

Reason for Purchase: ❑Alternative Heat ❑Main Heat Source

❑Decoration ❑Cost ❑Other _____

What was the determining factor for purchasing your new appliance?_____

_____

I have read the owner's manual that accompanies this unit and fully understand the:
Installation ❑ Operation ❑ and Maintenance ❑ of my new appliance.

Print Name _____ Signature _____ Date _____

Please attach a copy of your purchase receipt.

Warranty not valid without a Proof of Purchase.

Warranty information must be received within 30 days of original purchase.

Detach this page from this manual, fold in half with this page to the inside and tape together. Apply a stamp and mail to the address provided. You may use an envelope if you choose.

You may register online by going to www.usstove.com

All information submitted will be kept strictly confidential. Information provided will not be sold for advertising purposes.
Contact information will be used solely for the purpose of product notifications.

CUT HERE

CUT HERE

Fold Here

Fold Here

PLACE
STAMP
HERE

United States Stove Company
P.O. Box 151
South Pittsburg, TN 37380

CUT HERE

TOOLS AND MATERIALS NEEDED FOR INSTALLATION

You will need a drill with a 1/8" bit to install sheet metal screws into connector pipe. A 5/16" socket/wrench or screw driver to install pedestal trim, room air deflector, and blower assembly described below. A 1/2" socket/wrench to install flue collar. A non-combustible floor protector as specified in this manual. All chimney and chimney connector components required for your particular chimney installation.

The stove is attached to the shipping pallet by two bolts located under the pedestal trim piece. See the pedestal trim assembly section for more details.

ASSEMBLY

Flue Collar Assembly:

1. Mount the flue collar to the top of the unit as shown using the (3) 5/16-18 x 1-1/2 bolts, (3) washers, and (3) weld tabs provided in the parts box.

Room Air Deflector Assembly:

1. Locate the Room Air Deflector. Using the three(3) 1/2 Tek Screws provided, mount the deflector to the unit as shown in the diagram.

Firebrick Configuration:

1. Replace the Firebrick as shown in the illustration below.

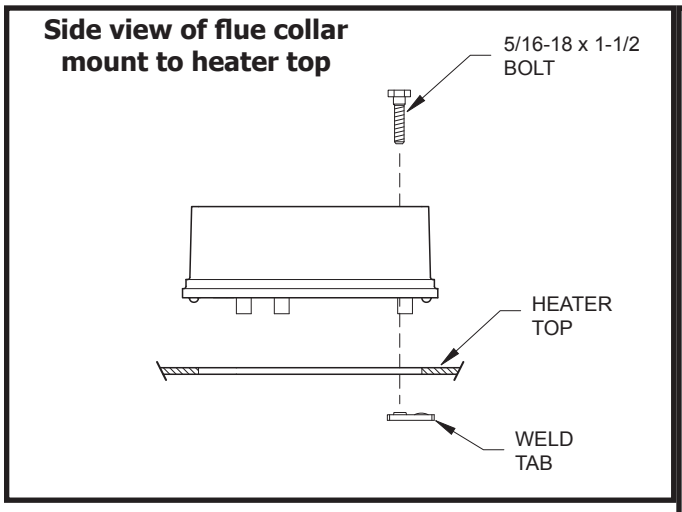

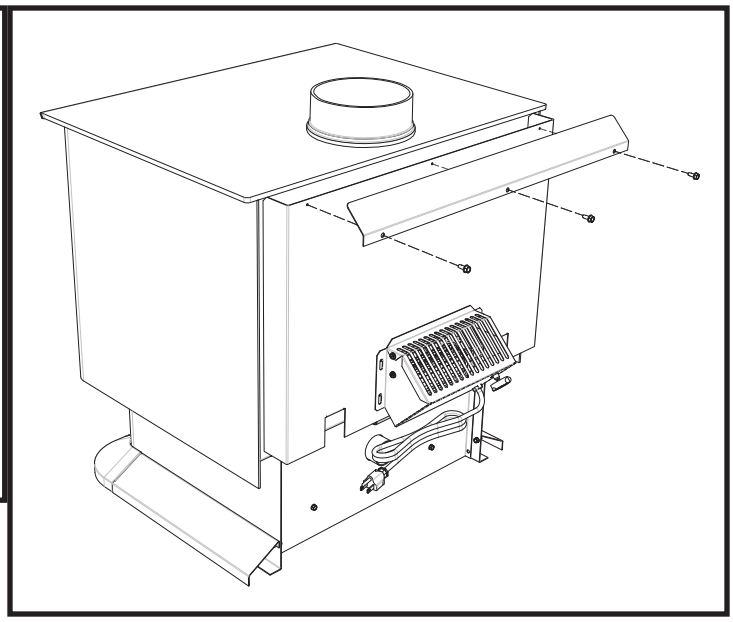

Brick Configuration

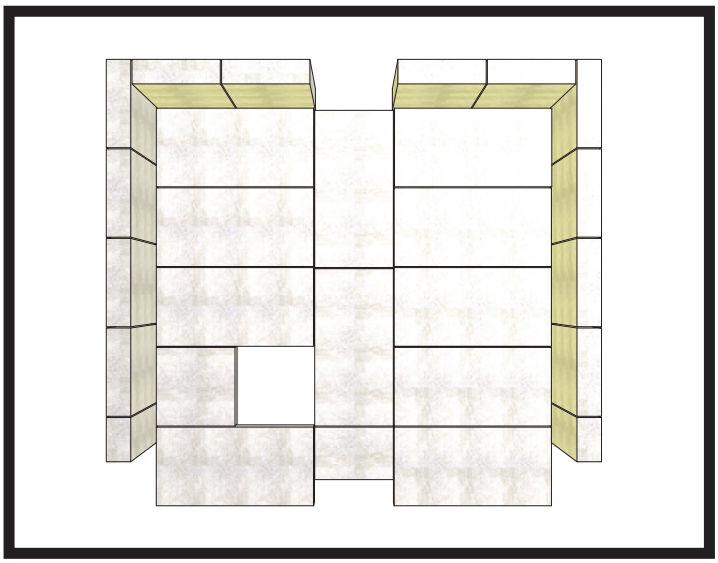

ASSEMBLY INSTRUCTIONS

Blower Assembly

THE BLOWER ASSEMBLY MUST BE DISCONNECTED FROM THE SOURCE OF ELECTRICAL SUPPLY BEFORE ATTEMPTING THE INSTALLATION.

THE BLOWER ASSEMBLY IS INTENDED FOR USE ONLY WITH A STOVE THAT IS MARKED TO INDICATE SUCH USE.

DO NOT ROUTE THE SUPPLY CORD NEAR OR ACROSS HOT SURFACES!

Fix the assembly to the back of the stove with the four screws provided.

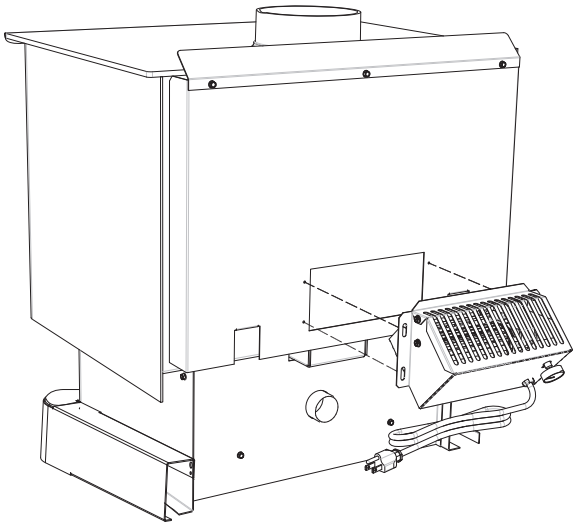

Pedestal Trim Assembly

Attach to the pedestal base at the location shown using the screws provided.

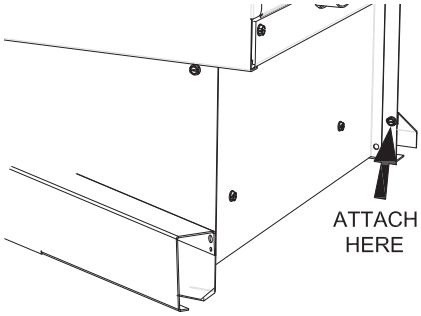

LEG ASSEMBLY

If not already installed or for purpose of repair, follow these directions. Because of this heaters weight, we suggest getting assistance maneuvering it into position.

Begin by removing all the firebrick. Carefully roll the heater onto its side, placing a couple wooden blocks to hold the heater off the legs. A piece of carpet would also help reduce the chances of scratching the unit. Once you've attached the legs with the supplied hardware, stand the heater back on its legs.

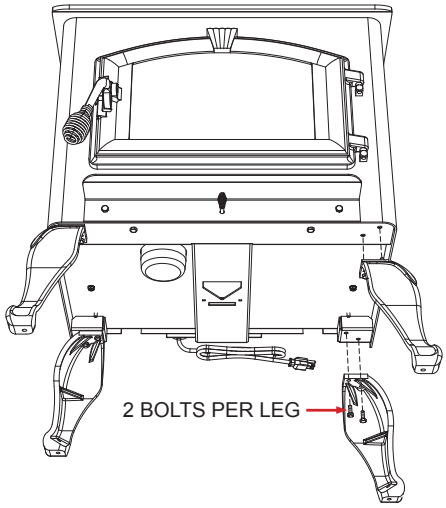

ASH PAN ASSEMBLY

If not already installed, slide the ash pan inside the ash pan housing.

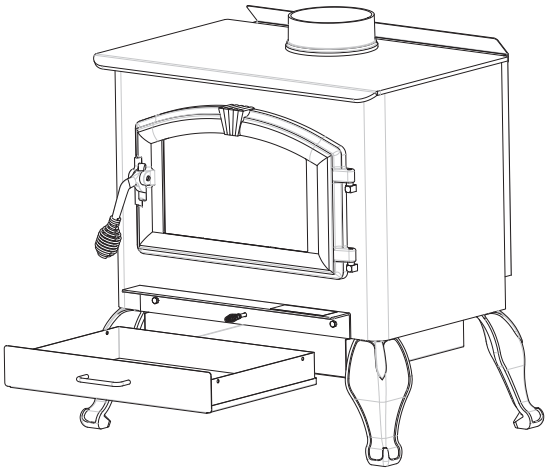

INSTALLATION

SAFETY NOTICE

- IF THIS STOVE IS NOT PROPERLY INSTALLED, A HOUSE FIRE MAY RESULT. TO REDUCE THE RISK OF FIRE, FOLLOW THE INSTALLATION INSTRUCTIONS.
- THIS STOVE IS NOT APPROVED FOR INSTALLATION IN A MANUFACTURED OR MOBILE HOME.
- CONSULT YOUR MUNICIPAL BUILDING DEPARTMENT OR FIRE OFFICIALS ABOUT PERMITS, RESTRICTIONS AND INSTALLATIONS REQUIREMENTS IN YOUR AREA.
- USE SMOKE DETECTORS IN THE ROOM WHERE YOUR STOVE IS INSTALLED.
- KEEP FURNITURE AND DRAPES WELL AWAY FROM THE STOVE.
- NEVER USE GASOLINE, GASOLINE-TYPE LANTERN FUEL, KEROSENE, CHARCOAL LIGHTER FLUID, OR SIMILAR LIQUIDS TO START OR "FRESHEN UP" A FIRE IN THIS HEATER. KEEP ALL SUCH LIQUIDS WELL AWAY FROM THE HEATER WHILE IT IS IN USE.
- IN THE EVENT OF A CHIMNEY FIRE, PUSH THE AIR CONTROL FULL CLOSED TO DEPRIVE THE FIRE OF OXYGEN. CALL THE FIRE DEPARTMENT.
- DO NOT CONNECT TO ANY AIR DISTRIBUTION DUCT OR SYSTEM.
- A SOURCE OF FRESH AIR INTO THE ROOM OR SPACE HEATED SHALL BE PROVIDED WHEN REQUIRED.

POSITIONING THE STOVE

It is very important to position the wood stove as close as possible to the chimney, and in an area that will favor the most efficient heat distribution possible throughout the house. The stove must therefore be installed in the room where the most time is spent, and in the most spacious room possible. Recall that wood stoves produce radiating heat, the heat we feel when we are close to a wood stove. A wood stove also functions by convection, that is through the displacement of hot air accelerated upwards and its replacement with cooler air. If necessary, the hot air distribution from the stove may be facilitated by the installation of a blower.

The wood stove must not be hooked up to a hot air distribution system since an excessive accumulation of heat may occur.
A wood stove must never be installed in a hallway or near a staircase, since it may block the way in case of fire or fail to respect required clearances.

FLOOR PROTECTOR

Your wood stove should be placed on a 1 inch, non-combustible surface with a k factor of 0.84. For multiple layers, add R-values of each layer to determine the overall R-value. The R value for the required board is 1.2. If there is a horizontal section of chimney connector, the floor protector should go under it and 2 inches beyond each side of the chimney connector.

Convert specification to R-value:

k-factor is given with a required thickness (T) in inches: R=1/k x T

C-factor is given: R=1/C

Example:

If the floor protector is 4" brick with a C-factor of 1.25 over 1/8" mineral board with a "k" factor of 0.29 the total R-value of the system is:

4" brick C=1.25, R=1/1.25=0.8

1/8" mineral board K=0.29, R=1/0.29 x 0.125=0.431

Total R = Rbrick + Rmineral = 0.8 + 0.431 = 1.231

Total R is greater than 1.2, the system is acceptable.

The floor protector should exceed the stove as follows:

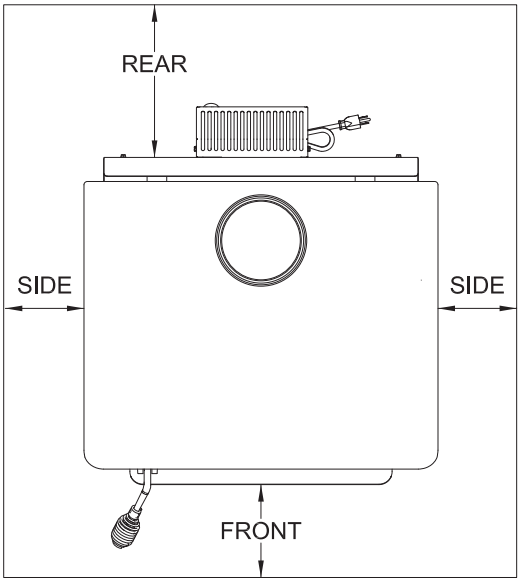

Model	Front	Sides	Rear
3000	26" (660mm)	8" (203mm)	☆6" (152mm)

☆ - Canadian installations require 8" (203mm)

CLEARANCES TO COMBUSTIBLES

It is of utmost importance that the clearances to combustible materials be strictly adhered to during installation of the stove. Refer to the tables below :

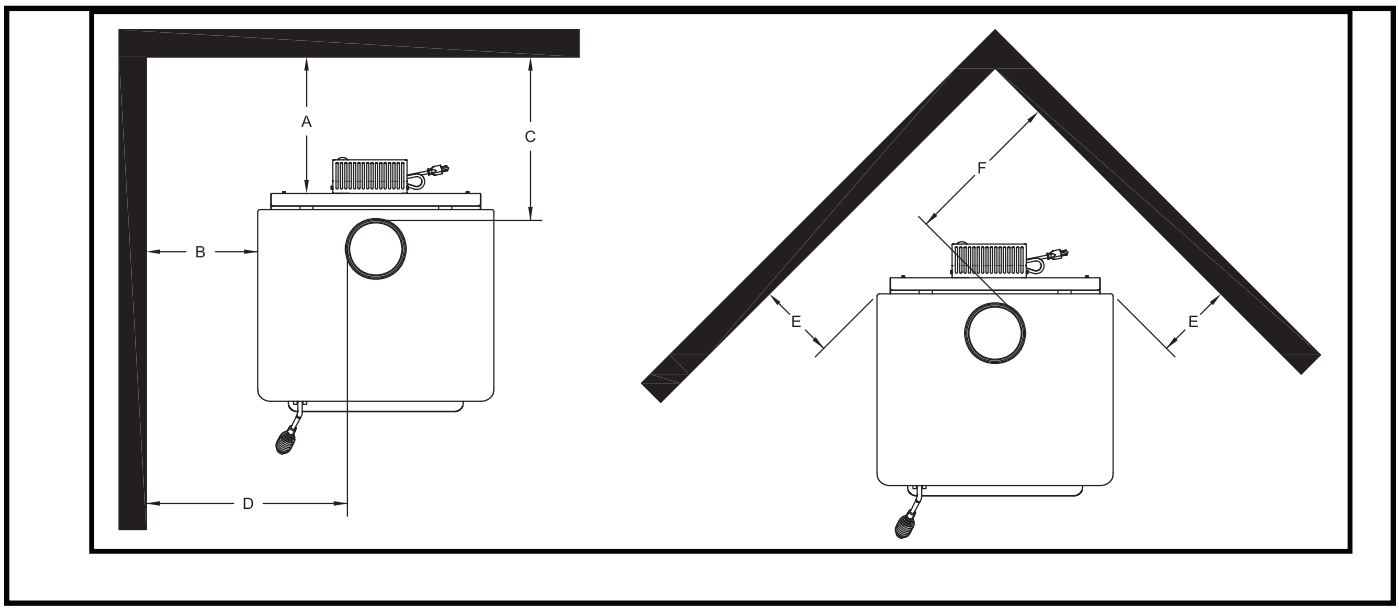

Single Wall Pipe						
Model	A	B	C	D	E	F
3000	14 (358mm)	20 (508mm)	17.5 (445mm)	30.5 (775mm)	11 (279mm)	24 (610mm)

- Floor to ceiling height must be at least 7' (2.13m) in all cases.
- Do not place any combustible material within 4' (1.2m) of the front of the unit.
- The clearance between the flue pipe and a wall are valid only for vertical walls and for vertical flue pipe.
- The chimney connector must not pass through an attic or roof space, closet or similar concealed space, a floor, or a ceiling.
- For Canadian installations, where passage through a wall, or partition of combustible construction is desired, the installation must conform to CAN/CSA-B365.
- A flue pipe crossing a combustible wall must have a minimum clearance of 18" (457.2mm).
- To reduce clearances from combustible materials, contact your local safety department.

CHIMNEY CONNECTOR (STOVE PIPE)

Your chimney connector and chimney must have the same diameter as the stove outlet (6”). If this is not the case, we recommend you contact your dealer in order to insure there will be no problem with the draft.

The stove pipe must be made of aluminized or cold roll steel with a minimum thickness of 0.021” or 0.53 mm. It is strictly forbidden to use galvanized steel.

Your smoke pipe should be assembled in such a way that the male section (crimped end) of the pipe faces down. Attach each of the sections to one another with three equidistant metal screws.

The pipe must be short and straight. All sections installed horizontally must slope at least 1/4 inch per foot, with the upper end of the section toward the chimney. Any installation with a horizontal run of chimney pipe must conform to NFPA 211. You may contact NFPA (National Fire Protection Association) and request the latest edition of the NFPA Standard 211.

To insure a good draft, the total length of the coupling pipe should never exceed 8’ to 10’ (2.4m to 3.04 m). (Except for cases of vertical installation, cathedral-roof style where the smoke exhaust system can be much longer and connected without problem to the chimney at the ceiling of the room).

There should never be more than two 90 degrees elbows in the smoke exhaust system.

Installation of a “barometric draft stabilizer” (fireplace register) on a smoke exhaust system is prohibited.

Furthermore, installation of a draft damper is not recommended. Indeed, with a controlled combustion wood stove, the draft is regulated upon intake of the combustion air in the stove and not at the exhaust.

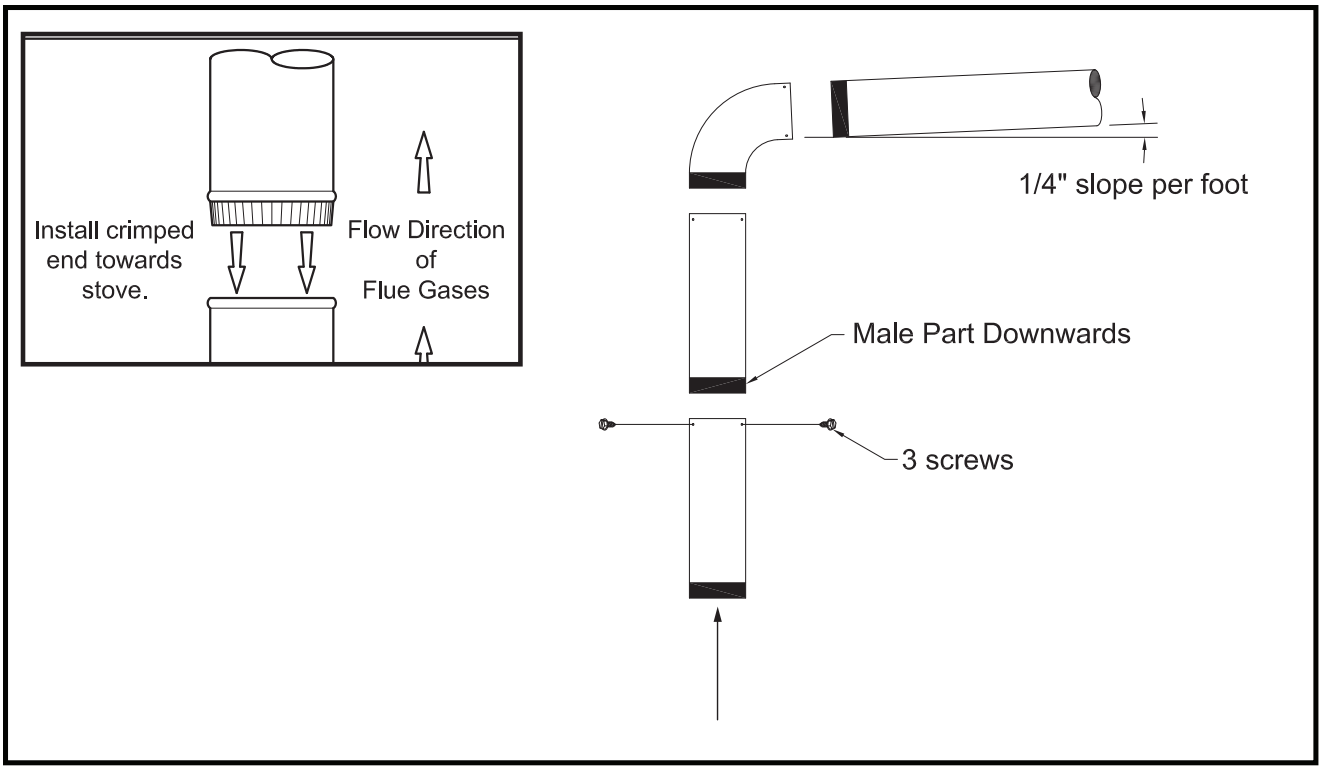

IMPORTANCE OF PROPER DRAFT

Draft is the force which moves air from the appliance up through the chimney. The amount of draft in your chimney depends on the length of the chimney, local geography, nearby obstructions and other factors. Too much draft may cause excessive temperatures in the appliance. Inadequate draft may cause backpuffing into the room and ‘plugging’ of the chimney.

“Inadequate draft will cause the appliance to leak smoke into the room through appliance and chimney connector joints.”

“An uncontrollable burn or excessive temperature indicates excessive draft.”

CHIMNEY

Your wood stove may be hooked up with a 6” factory built or masonry chimney. If you are using a factory built chimney, it must comply with UL 103 or CSA-B365 standard; therefore it must be a Type HT (2100°F). It is extremely important that it be installed according to the manufacturer’s specifications. Take into account the chimney’s location to insure it is not too close to neighbors or in a valley which may cause unhealthy or nuisance conditions.

If you are using a masonry chimney, it is important that it be built in compliance with the specifications of the National Building Code. It must be lined with fire clay bricks, metal or clay tiles sealed together with fire cement. (Round flues are the most efficient).

The interior diameter of the chimney flue must be identical to the stove smoke exhaust. A flue which is too small may cause draft problems, while a large flue favours rapid cooling of the gas, and hence the build-up of creosote and the risk of chimney fires. Note that it is the chimney and not the stove which creates the draft effect; your stove’s performance is directly dependent on an adequate draft from your chimney.

The following recommendations may be useful for the installation of your chimney:

1. DO NOT CONNECT THIS UNIT TO A CHIMNEY FLUE SERVING ANOTHER APPLIANCE.
2. It must rise above the roof at least 3’ (0.9m) from the uppermost point of contact.
3. The chimney must exceed any part of the building or other obstruction within a 10’ (3.04m) distance by a height of 2’ (0.6m).
4. Installation of an interior chimney is always preferable to an exterior chimney. Indeed, the interior chimney will, by definition, be hotter than an exterior chimney, being heated up by the ambient air in the house. Therefore the gas which circulates will cool more slowly, thus reducing the build-up of creosote and the risk of chimney fires.
5. The draft caused by the tendency for hot air to rise will be increased with an interior chimney.
6. Using a fire screen at the extremity of the chimney requires regular inspection in order to insure that it is not obstructed thus blocking the draft, and it should be cleaned when used regularly.

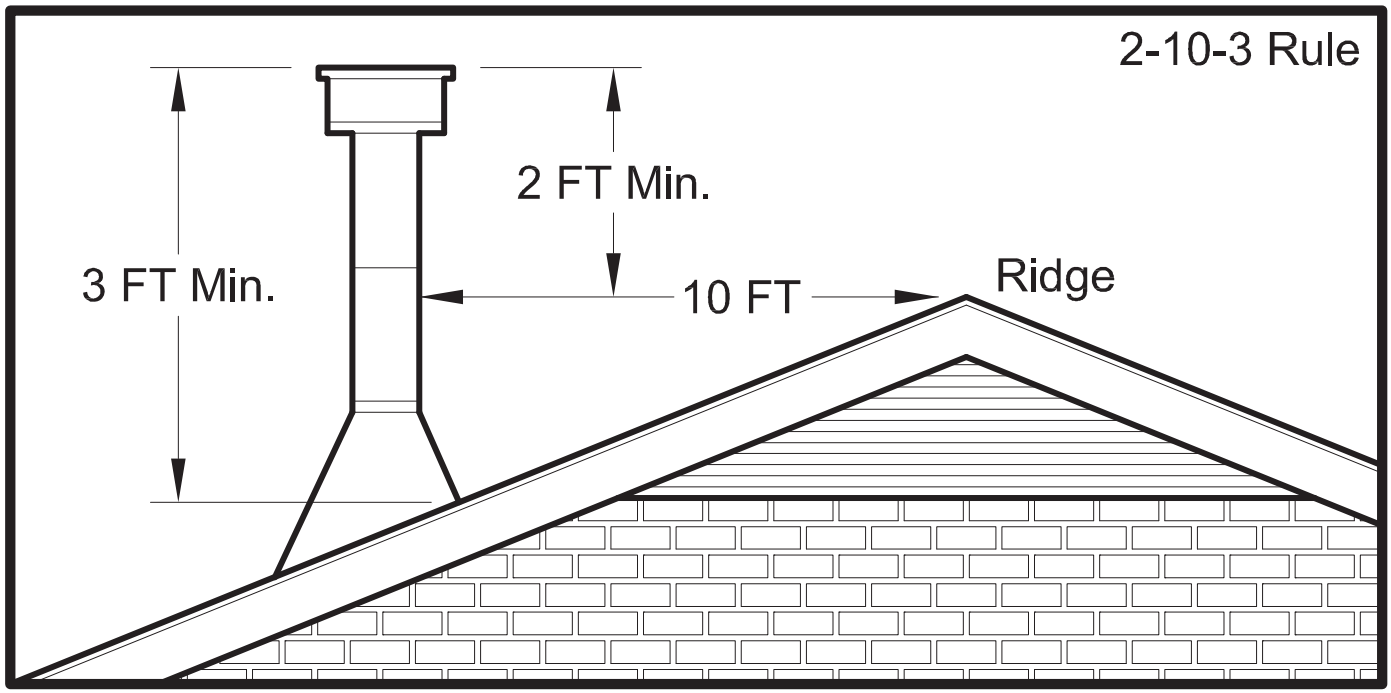

FACTORY BUILT CHIMNEY

When a metal prefabricated chimney is used, the manufacturer's installation instructions must be followed. You must also purchase (from the same manufacturer) and install the ceiling support package or wall pass-through and "T" section package, firestops (where needed), insulation shield, roof flashing, chimney cap, etc. Maintain proper clearance to the structure as recommended by the manufacturer. The chimney must be the required height above the roof or other obstructions for safety and proper draft operation.

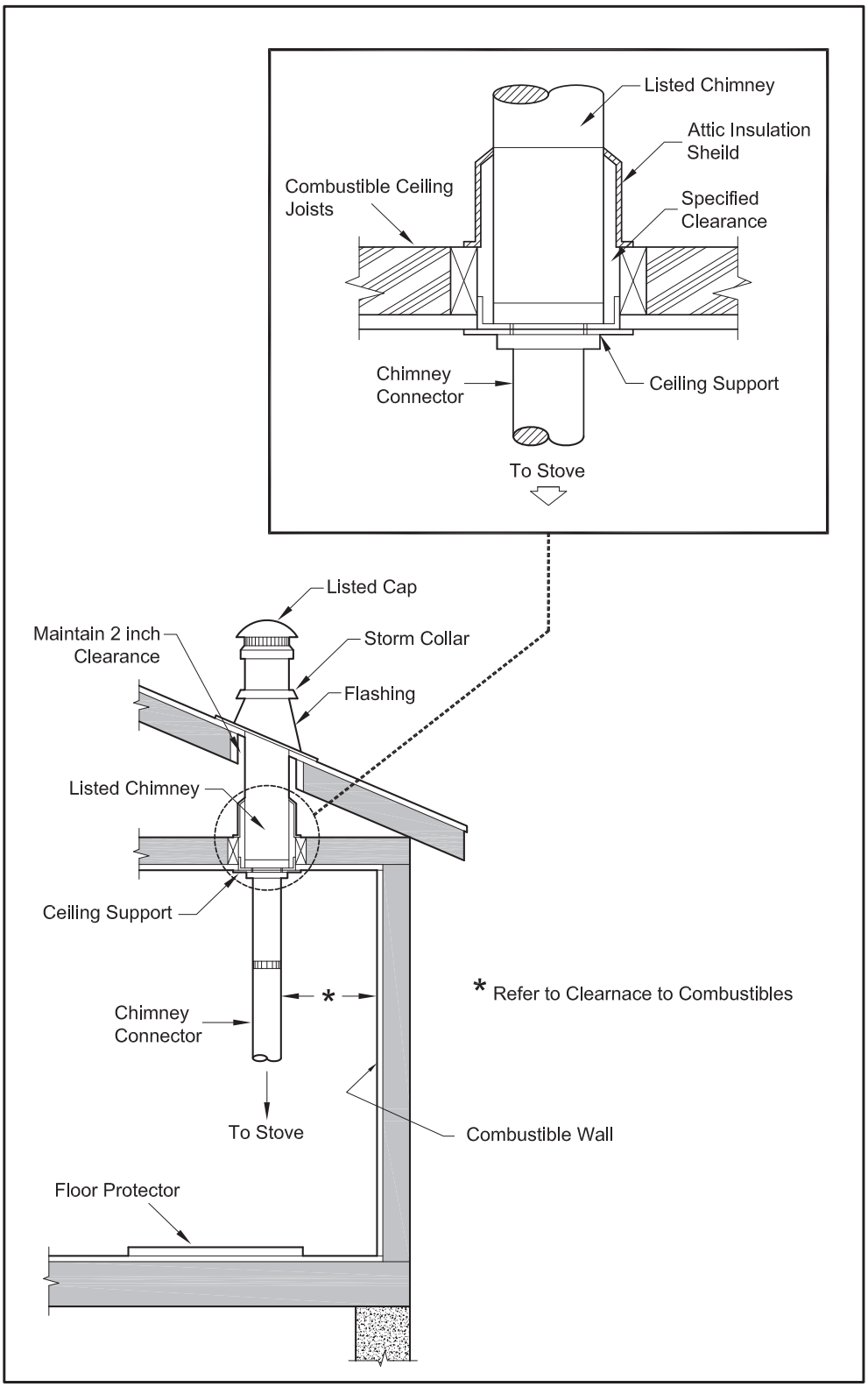

MASONRY CHIMNEY

Ensure that a masonry chimney meets the minimum standards of the National Fire Protection Association (NFPA) by having it inspected by a professional. Make sure there are no cracks, loose mortar or other signs of deterioration and blockage. Have the chimney cleaned before the stove is installed and operated. When connecting the stove through a combustible wall to a masonry chimney, special methods are needed.

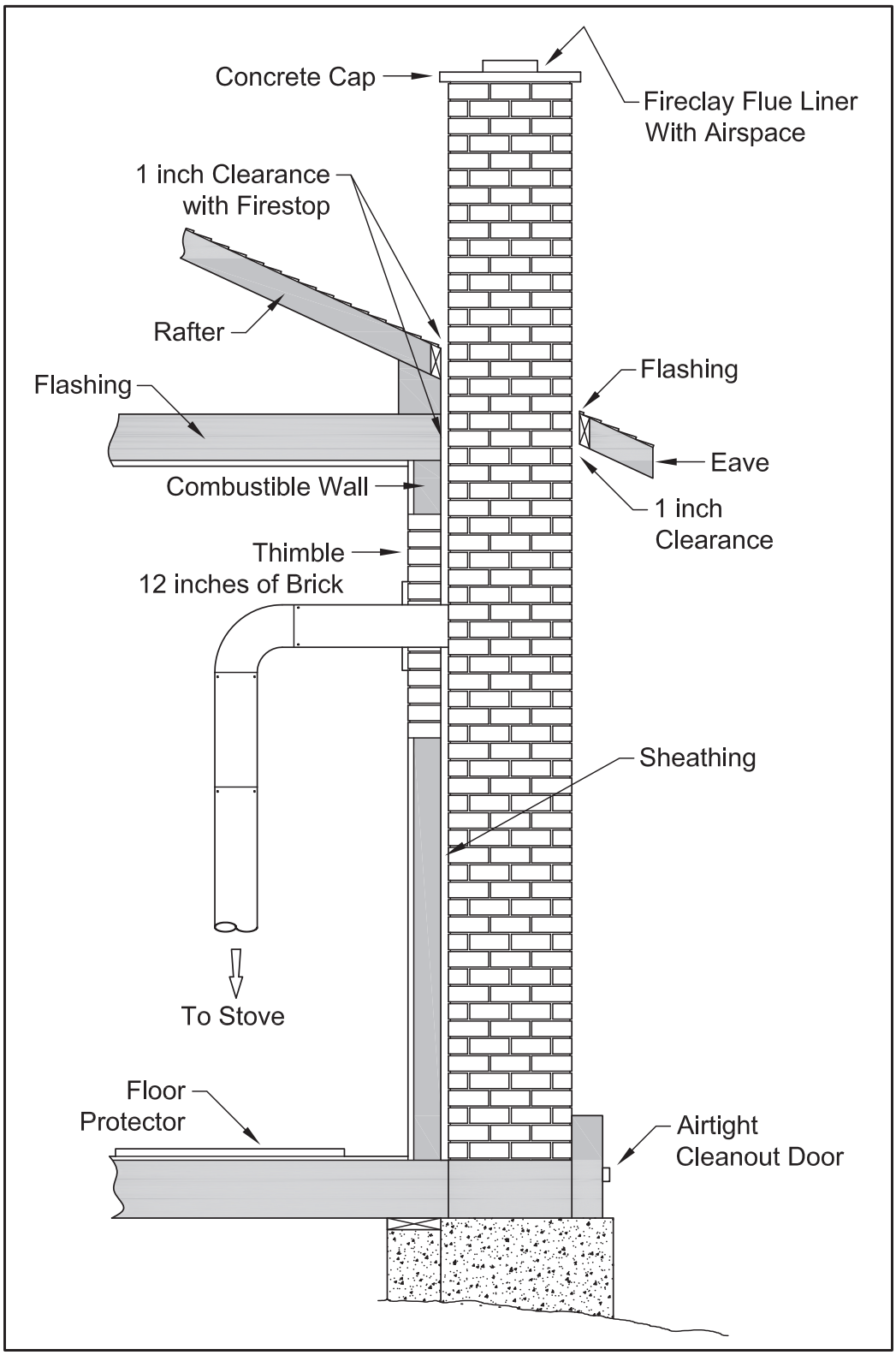

COMBUSTIBLE WALL CHIMNEY CONNECTOR PASS-THROUGHS

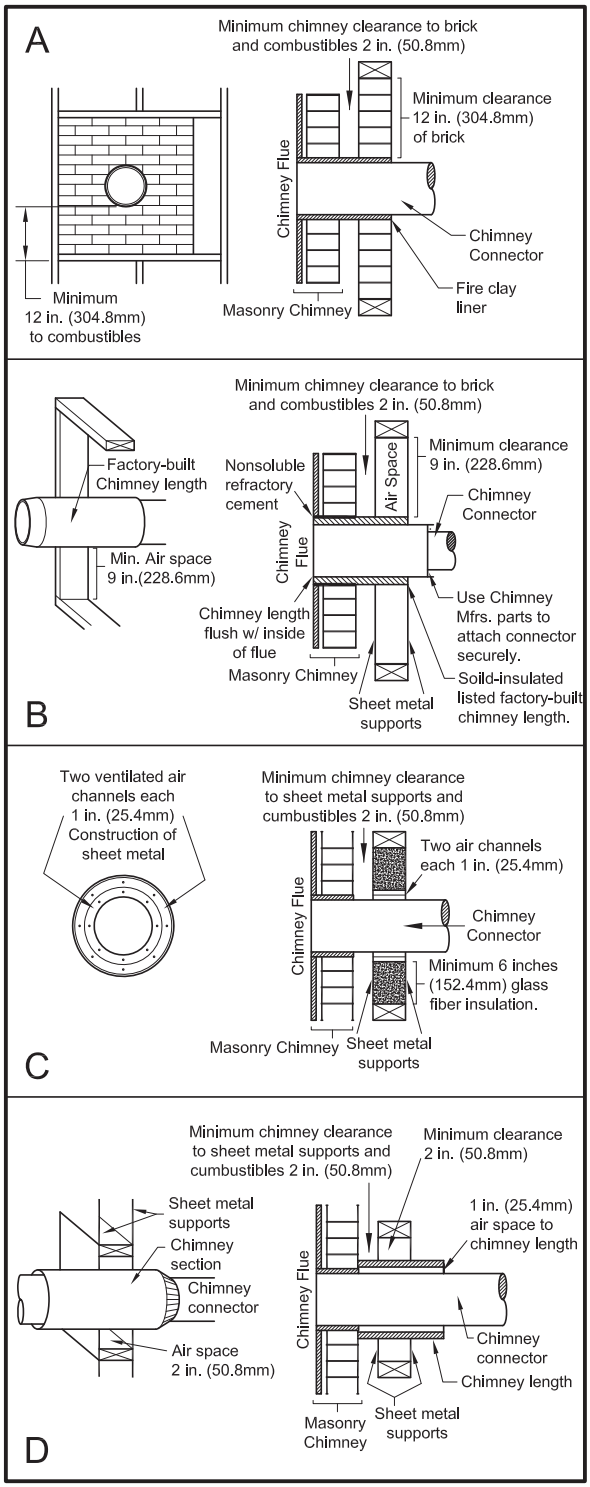

Method A. 12" (304.8 mm) Clearance to Combustible Wall Member: Using a minimum thickness 3.5" (89 mm) brick and a 5/8" (15.9 mm) minimum wall thickness clay liner, construct a wall pass-through. The clay liner must conform to ASTM C315 (Standard Specification for Clay Fire Linings) or its equivalent. Keep a minimum of 12" (304.8 mm) of brick masonry between the clay liner and wall combustibles. The clay liner shall run from the brick masonry outer surface to the inner surface of the chimney flue liner but not past the inner surface. Firmly grout or cement the clay liner in place to the chimney flue liner.

Method B. 9" (228.6 mm) Clearance to Combustible Wall Member: Using a 6" (152.4 mm) inside diameter, listed, factory-built Solid-Pak chimney section with insulation of 1" (25.4 mm) or more, build a wall pass-through with a minimum 9" (228.6 mm) air space between the outer wall of the chimney length and wall combustibles. Use sheet metal supports fastened securely to wall surfaces on all sides, to maintain the 9" (228.6 mm) air space. When fastening supports to chimney length, do not penetrate the chimney liner (the inside wall of the Solid-Pak chimney). The inner end of the Solid-Pak chimney section shall be flush with the inside of the masonry chimney flue, and sealed with a non-water soluble refractory cement. Use this cement to also seal to the brick masonry penetration.

Method C. 6" (152.4 mm) Clearance to Combustible Wall Member: Starting with a minimum 24 gage (.024" [.61 mm]) 6" (152.4 mm) metal chimney connector, and a minimum 24 gage ventilated wall thimble which has two air channels of 1" (25.4 mm) each, construct a wall pass-through. There shall be a minimum 6" (152.4) mm separation area containing fiberglass insulation, from the outer surface of the wall thimble to wall combustibles. Support the wall thimble, and cover its opening with a 24-gage minimum sheet metal support. Maintain the 6" (152.4 mm) space. There should also be a support sized to fit and hold the metal chimney connector. See that the supports are fastened securely to wall surfaces on all sides. Make sure fasteners used to secure the metal chimney connector do not penetrate chimney flue liner.

Method D. 2" (50.8 mm) Clearance to Combustible Wall Member: Start with a solid-pak listed factory built chimney section at least 12" (304 mm) long, with insulation of 1" (25.4 mm) or more, and an inside diameter of 8" (2 inches [51 mm] larger than the 6" [152.4 mm] chimney connector). Use this as a pass-through for a minimum 24-gauge single wall steel chimney connector. Keep solid-pak section concentric with and spaced 1" (25.4 mm) off the chimney connector by way of sheet metal support plates at both ends of chimney section. Cover opening with and support chimney section on both sides with 24 gage minimum sheet metal supports. See that the supports are fastened securely to wall surfaces on all sides. Make sure fasteners used to secure chimney flue line.

NOTES:

1. Connectors to a masonry chimney, excepting method B, shall extend in one continuous section through the wall pass-through system and the chimney wall, to but not past the inner flue liner face.
2. A chimney connector shall not pass through an attic or roof space, closet or similar concealed space, or a floor, or ceiling.

OUTSIDE COMBUSTION AIR

Your wood stove is approved to be installed with an outside air intake which is necessary for a tightly constructed home and houses with a negative pressure problem. You can purchase this option through your heater dealer or your local hardware store. Using a Semi-Rigid 4" dryer vent system is optimal. The outside hood must not be the type with louvers, rodent grill only.

Outside combustion air may be required if :

1. Your stove does not draw steadily, smoke rollout occurs, wood burns poorly, or back-drafts occur whether or not there is combustion present.
2. Existing fuel-fired equipment in the house, such as fireplaces or other heating appliances, smell, do not operate properly, suffer smoke roll-out when opened, or back-drafts occur whether or not there is combustion present.
3. Opening a window slightly on a calm (windless) day alleviates any of the above symptoms.
4. The house is equipped with a well-sealed vapor barrier and tight fitting windows and/or has any powered devices that exhaust house air.
5. There is excessive condensation on windows in the winter.
6. A ventilation system is installed in the house.

WOODSTOVE UTILIZATION

This heater is designed to burn natural wood only. Higher efficiencies and lower emissions generally result when burning air dried seasoned hardwoods, as compared to softwoods or to green or freshly cut hardwoods.

DO NOT BURN:

1. Garbage;
2. Lawn clippings or yard waste;
3. Materials containing rubber, including tires;
4. Materials containing plastic;
5. Waste petroleum products, paints or paint thinners, or asphalt products;
6. Materials containing asbestos;
7. Construction or demolition debris;
8. Railroad ties or pressure-treated wood;
9. Manure or animal remains;
10. Salt water driftwood or other previously salt water saturated materials;
11. Unseasoned wood; or
12. Paper products, cardboard, plywood, or particleboard. The prohibition against burning these materials does not prohibit the use of fire starters made from paper, cardboard, saw dust, wax and similar substances for the purpose of starting a fire in an affected wood heater.

Burning these materials may result in release of toxic fumes or render the heater ineffective and cause smoke.

Dead wood lying on the forest floor should be considered wet, and requires full seasoning time. Standing dead wood can usually be considered to be about 2/3 seasoned. Splitting and stacking wood before it is stored accelerates drying time. Storing wood on an elevated surface from the ground and under a cover or covered area from rain or snow also accelerates drying time. A good indicator if wood is ready to burn is to check the piece ends. If there are cracks radiating in all directions from the center then the wood should be dry enough to burn. If your wood sizzles in the fire, even though the surface is dry, it may not be fully cured, and should be seasoned longer

Waste and other flammable materials should not be burned in your stove. Any type of wood may be used in your stove, but specific varieties have better energy yields than others. Please consult the following table in order to make the best possible choice.

TYPE	WEIGHT (LBS. CU. FT., DRY)	PER CORD	EFFICIENCY RANKING	SPLITS	MILLIONS BTU's/CORD
Hickory	63	4500	1.0	Well	31.5
White Oak	48	4100	.9	Fair	28.6
Red Oak	46	3900	.8	Fair	27.4
Beech	45	3800	.7	Hard	26.8
Sugar Maple	44	3700	.6	Fair	26.2
Black Oak	43	3700	.6	Fair	25.6
Ash	42	3600	.5	Well	25.0
Yellow Birch	40	3400	.4	Hard	23.8
Red Maple	38	3200	.3	Fair	22.6
Paper Birch	37	3100	.3	Easy	22.1
Elm/Sycamore	34	2900	.2	Very Difficult	20.1
Red Spruce	29	1800	.1	Easy	16.1

It is EXTREMELY IMPORTANT that you use DRY WOOD only in your wood stove. The wood should have dried for 9 to 15 months, such that the humidity content (in weight) is reduced below 20% of the weight of the log. It is very important to keep in mind that even if the wood has been cut for one, two or even more years, it is not necessarily dry, if it has been stored in poor conditions. Under extreme conditions it may rot instead of drying. This point cannot be over stressed; the vast majority of the problems related to the operation of a wood stove is caused by the fact that the wood used was too damp or had dried in poor conditions. These problems can be:

- ignition problems
- low energy yield
- incomplete log combustion
- creosote build-up causing chimney fires
- blackened windows

Smaller pieces of wood will dry faster. All logs exceeding 6" in diameter should be split. The wood should not be stored directly on the ground. Air should circulate through the cord. A 24" to 48" air space should be left between each row of logs, which should be placed in the sunniest location possible. The upper layer of wood should be protected from the elements but not the sides.

TESTING YOUR WOOD

When the stove is thoroughly warmed, place one piece of split wood (about five inches in diameter) parallel to the door on the bed of red embers. Keep the air control full open by pulling on it and close the door. If ignition of the piece is accomplished within 90 seconds from the time if was placed in the stove, your wood is correctly dried. If ignition takes longer, your wood is damp.

If your wood hisses and water or vapor escapes at the ends of the piece, your wood is soaked or freshly cut. Do not use this wood in your stove. Large amounts of creosote could be deposited in your chimney, creating potential conditions for a chimney fire.

TAMPER WARNING

This wood heater has a manufacturer-set minimum low burn rate that must not be altered. It is against federal regulations to alter this setting or otherwise operate this wood heater in a manner inconsistent with operating instructions in this manual.

THE FIRST FIRES

The fresh paint on your stove needs to be cured to preserve its quality. Once the fuel charge is properly ignited, only burn small fires in your stove for the first four hours of operation. Never open the air control more than necessary to achieve a medium burn rate.

Make sure that there's enough air circulation while curing the stove. The odors could be smelled during the 3 or 4 first fires. Never start your stove outside. You will not be able to see if you are over heating.

Do not build fires too close to the glass. Try building behind the lip just inside the door opening.

IGNITION

After making sure that the stove air intake controls are fully open (completely pull-out towards you), The top down method of fire building is recommended for this appliance. After making sure that the stove air intake controls are fully open (completely pull-out towards you), Place the largest pieces of wood on the bottom, laid in parallel and close together. Smaller pieces are placed in a second layer, crossways to the first. A third layer of still smaller pieces is laid crossways to the second, this time with some spaces between. Then a fourth layer of loose, small kindling and twisted newspaper sheets tops off the pile.No chemical product should be used to light the fire.

Before igniting the paper and kindling wood, it is recommended that you warm up the chimney. This is done in order to avoid back draft problems often due to negative pressure in the house. If such is the case, open a window slightly near the stove and twist together a few sheets of newspaper into a torch. Light up this paper torch and hold it as close as possible to the mouth of the pipe inside the combustion chamber to warm up the chimney. Once the updraft movement is initiated, you are ready to ignite the stove by lighting the paper and kindling wood inside the combustion chamber.

When you have achieved a good bed of hot embers, we recommend the following burn procedures:

3000			
Primary Air Settings (Slide Damper is located in center of stove under hearth plate) (Damper Adjustment: Pulling out on damper increases air)		Electric Blower Speed Setting (Variable) (Blower is on High when turned "ON", Rotate clockwise until stop for "LOW".)	
Burn Rate	Adjust Damper from fully closed	Burn Time	Blower Speed
Low	1/8" (3.2mm)	@ 30 minutes	Low
Medium - Low	1/4" (6.3mm)	@ 30 minutes	Low
Medium - High	1-1/8" (12.7mm)	@ 30 minutes	Low
High	approx. 3" (76mm)	all minutes	High

CAUTION: Never alter the damper slide or the adjustment range to increase firing for any reason. Doing so could result in heater damage and will void your warranty.

HEATING

Controlled combustion is the most efficient technique for wood heating because it enables you to select the type of combustion you want for each given situation. The wood will burn slowly if the wood stove air intake control is adjusted to reduce the oxygen supply in the combustion chamber to a minimum. On the other hand, wood will burn quickly if the air control is adjusted to admit a larger quantity of oxygen in the combustion chamber. The air intake control on your stove is very simple. If you pull on it out completely towards you, it is fully open. If you push on it until it stops the combustion air is reduced to a minimum. Real operating conditions may give very different results than those obtained during testing according to the species of wood used, its moisture content, the size and density of the pieces, the length of the chimney, altitude and outside temperature.

WARNINGS

- NEVER OVERFIRE YOUR STOVE. IF ANY PART OF THE STOVE STARTS TO GLOW RED, OVER FIRING IS HAPPENING. READJUST THE AIR INTAKE CONTROL AT A LOWER SETTING.
- THE INSTALLATION OF A LOG CRADLE or GRATES IS NOT RECOMMENDED IN YOUR WOOD STOVE. BUILD FIRE DIRECTLY ON FIREBRICK.
- NEVER PUT WOOD ABOVE THE FIREBRICK LINING OF THE FIREBOX.
- ATTEMPTS TO ACHIEVE HEAT OUTPUT RATES THAT EXCEED HEATER DESIGN SPECIFICATIONS CAN RESULT IN PERMANENT DAMAGE TO THE HEATER

EFFICIENCY

Efficiencies can be based on either the lower heating value (LHV) or the higher heating value (HHV) of the fuel. The lower heating value is when water leaves the combustion process as a vapor, in the case of woodstoves the moisture in the wood being burned leaves the stove as a vapor. The higher heating value is when water leaves the combustion process completely condensed. In the case of woodstoves this would assume the exhaust gases are room temperature when leaving the system, and therefore calculations using this heating value consider the heat going up the chimney as lost energy. Therefore, efficiency calculated using the lower heating value of wood will be higher than efficiency calculated using the higher heating value. In the United States all woodstove efficiencies should be calculated using the higher heating value. The best way to achieve optimum efficiencies is to learn the burn characteristic of you appliance and burn well-seasoned wood. Higher burn rates are not always the best heating burn rates; after a good fire is established a lower burn rate may be a better option for efficient heating. A lower burn rate slows the flow of usable heat out of the home through the chimney, and it also consumes less wood.

VISIBLE SMOKE

The amount of visible smoke being produced can be an effective method of determining how efficiently the combustion process is taking place at the given settings. Visible smoke consist of unburned fuel and moisture leaving your stove. Learn to adjust the air settings of your specific unit to produce the smallest amount of visible smoke. Wood that has not been seasoned properly and has a high wood moisture content will produce excess visible smoke and burn poorly.

RELOADING

Once you have obtained a good bed of embers, you should reload the unit. In order to do so, open the air controls to maximum a few seconds prior to opening the stove's door. Then proceed by opening the door very slowly; open it one or two inches for 5 to 10 seconds, before opening it completely to increase the draft and thus eliminate the smoke which is stagnant in a state of slow combustion in the stove. Then bring the red embers to the front of the stove and reload the unit. For optimal operation of your wood stove, we recommend you to operate it with a wood load approximately equivalent to the height of fire bricks. It is important to note that wood combustion consumes ambient oxygen in the room .In the case of negative pressure, it is a good idea to allow fresh air in the room, either by opening a window slightly or by installing a fresh air intake system on an outside wall.

Creosote - Formation and Need for Removal - When wood is burned slowly, it produces tar and other organic vapors, which combine with expelled moisture to form creosote. The creosote vapors condense in the relatively cool chimney flue of a slow-burning fire. As a result, creosote residue accumulates on the flue lining. When ignited this creosote makes an extremely hot fire. The chimney connector and chimney should be inspected at least once every two months during the heating season to determine if a creosote build-up has occurred. If creosote has accumulated (3mm or more), it should be removed to reduce the risk of a chimney fire. We strongly recommend that you install a magnetic thermometer on your smoke exhaust pipe, approximately 18" above the stove. This thermometer will indicate the temperature of your gas exhaust fumes within the smoke exhaust system. The ideal temperature for these gases is somewhere between 275°F and 500°F. Below these temperatures, the build-up of creosote is promoted. Above 500 degrees, heat is wasted since a too large quantity is lost into the atmosphere.

TO PREVENT CREOSOTE BUILD UP

- Always burn dry wood. This allows clean burns and higher chimney temperatures, therefore less creosote deposit.
- Leave the air control full open for about 5 min. every time you reload the stove to bring it back to proper operating temperatures. The secondary combustion can only take place if the firebox is hot enough.
- Always check for creosote deposit once every two months and have your chimney cleaned at least once a year.

If a chimney or creosote fire occurs, close all dampers immediately. Wait for the fire to go out and the heater to cool, then inspect the chimney for damage. If no damage results, perform a chimney cleaning to ensure there is no more creosote deposits remaining in the chimney.

OPERATIONAL TIPS

Operational Tips for Good, Efficient, and Clean Combustion

- Get the appliance hot and establish a good coal bed before adjusting to a low burn rate (this may take 30 minutes or more depending on your wood)
- Use smaller pieces of wood during start-up and a high burn rate to increase the stove temperature
- Be considerate of the environment and only burn dry wood
- Burn small, intense fires instead of large, slow burning fires when possible
- Learn your appliance's operating characteristics to obtain optimum performance
- Burning unseasoned wet wood only hurts your stoves efficiency and leads to accelerated creosote buildup in your chimney

ASH DISPOSAL

Whenever ashes get 3 to 4 inches deep in your firebox or ash pan, and when the fire has burned down and cooled, remove excess ashes. Leave an ash bed approximately 1 inch deep on the firebox bottom to help maintain a hot charcoal bed.

Ashes should be placed in a metal container with a tight-fitting lid. The closed container of ashes should be placed on a noncombustible floor or on the ground, away from all combustible materials, pending final disposal. The ashes should be retained in the closed container until all cinders have thoroughly cooled.

SMOKE AND CO MONITORS

Burning wood naturally produces smoke and carbon monoxide(CO) emissions. CO is a poisonous gas when exposed to elevated concentrations for extended periods of time. While the modern combustion systems in heaters drastically reduce the amount of CO emitted out the chimney, exposure to the gases in closed or confined areas can be dangerous. Make sure you stove gaskets and chimney joints are in good working order and sealing properly to ensure unintended exposure. It is recommended that you use both smoke and CO monitors in areas having the potential to generate CO.

CAUTIONS:

- ASHES COULD CONTAIN HOT EMBERS EVEN AFTER TWO DAYS WITHOUT OPERATING THE STOVE.
- THE ASH PAN CAN BECOME VERY HOT. WEAR GLOVES TO PREVENT INJURY.
- NEVER BURN THE STOVE WITH THE ASH TRAP OPEN. THIS WOULD RESULT IN OVER FIRING THE STOVE. DAMAGE TO THE STOVE AND EVEN HOUSE FIRE MAY RESULT.

MAINTENANCE

Your wood stove is a high efficiency stove and therefore requires little maintenance. It is important to perform a visual inspection of the stove every time it is emptied, in order to insure that no parts have been damaged, in which case repairs must be performed immediately. Inspect and clean the chimney and connector pipe periodically for creosote buildup or obstructions.

GLASS

- Inspect and clean the glass regularly in order to detect any cracks. If you spot one, allow the fire to go out and the stove to cool before repairing. Never wash the glass with a product that may scratch the glass. Use a specialized product, available in the stores where wood stoves are sold. The glass should be washed only when the heater is cold.
- Do not abuse the glass door by striking or slamming shut. Do not use the stove if the glass is broken. If the glass on your stove breaks, replace only with the glass supplied from your heater dealer. Never substitute other materials for the glass.
- To replace the glass, remove the screws retaining the glass mouldings inside the door. Remove the mouldings and replace the damaged piece with a new one. Perform the procedure backwards after replacing. When replacing the glass, you should change the glass gasket to make sure you keep it sealed.

GASKETING

It is recommended that you change the door gasket (which makes your stove door air tight) once a year, in order to insure good control over the combustion, maximum efficiency and security. To change the door gasket, simply remove the damaged one. Carefully clean the available gasket groove, apply a high temperature silicone sold for this purpose, and install the new gasket. You may light up your stove again approximately 24 hours after having completed this operation. This unit's door uses a 5/8" diameter rope gasket.

WARNING:

- NEVER OPERATE THE STOVE WITHOUT A GASKET OR WITH A BROKEN ONE. DAMAGE TO THE STOVE OR EVEN HOUSE FIRE MAY RESULT.

PAINT

Only clean your stove with a dry soft cloth that will not harm the paint finish. If the paint becomes scratched or damaged, it is possible to give your wood stove a brand new look, by repainting it with a 1200° F heat resistant paint. For this purpose, simply scrub the surface to be repainted with fine sand paper, clean it properly, and apply thin coats (2) of paint successively.

BLOWER

The blower needs to be removed and air blown clean. Make sure the blades do not have build up.

AIR TUBES

The air tubes assembled in this unit are designed to provide an accurate mix of secondary air to insure the highest efficiency. Any damage or deterioration of these tubes may reduce the efficiency of combustion. The air tubes are held in position by either screws or snap pins. Locate these to either side of the tube and remove to allow the tube to be removed and replaced.

ATTENTION:

This wood heater needs periodic inspection and repair for proper operation. It is against federal regulations to operate this wood heater in a manner inconsistent with operating instructions in this manual.

REPAIR PARTS

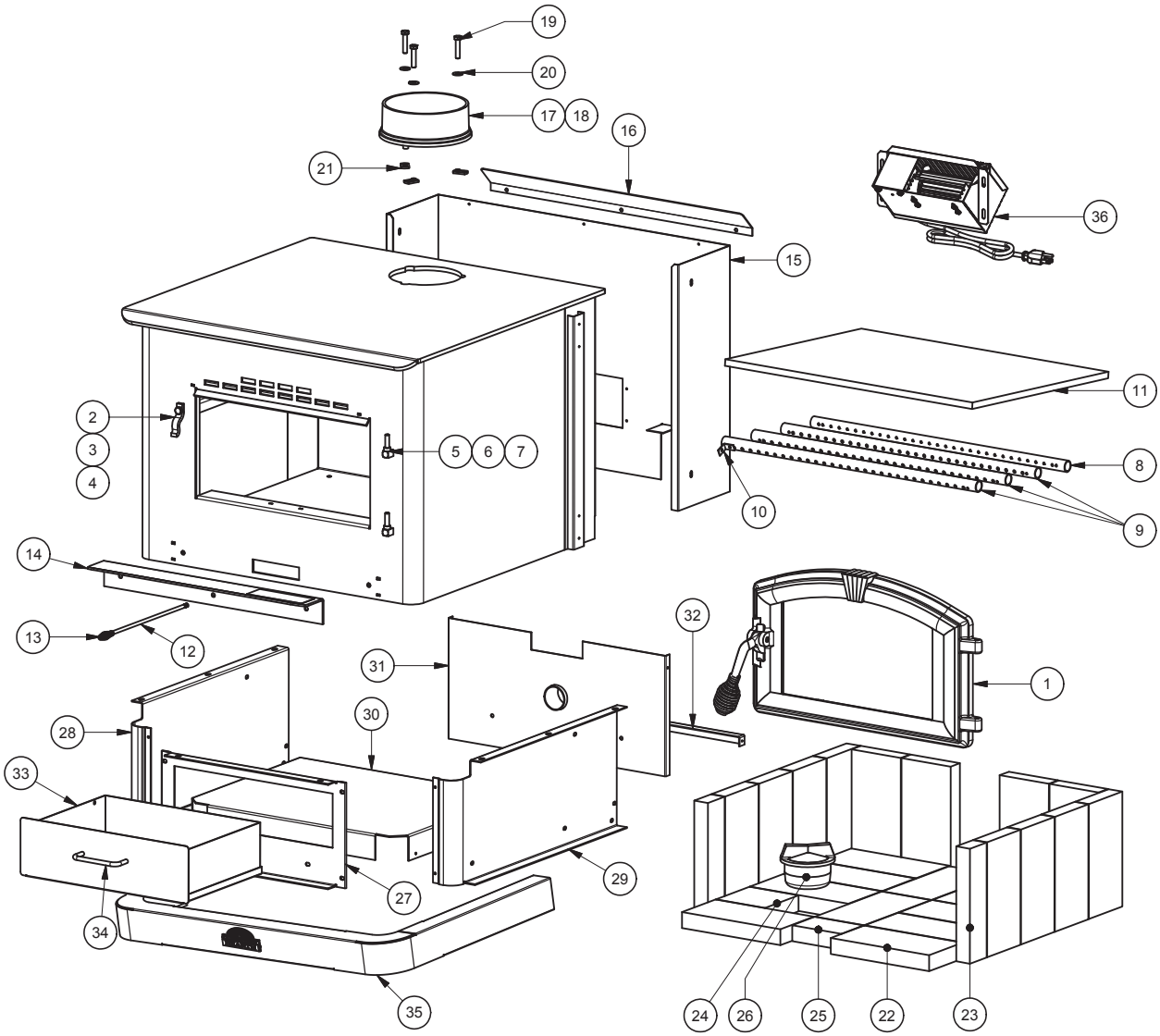

Feed Door Assembly

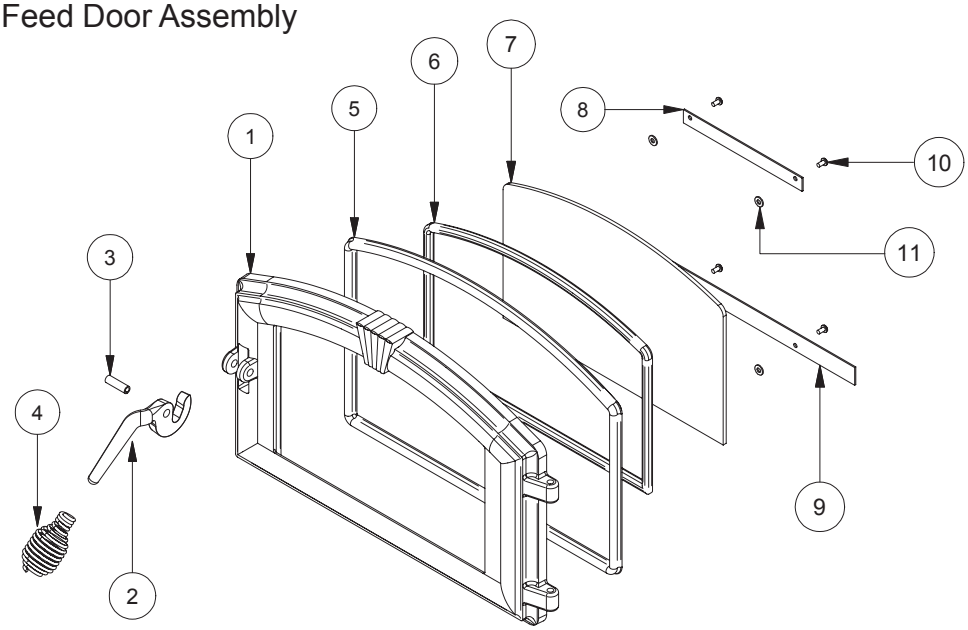

REPAIR PARTS

Key	Part No.	Description	Qty.
1	69516	Feed Door Assy.	1
2	25080B	Feed Door Latch	1
3	83508	5/16-18 x 3/4 Hex Head Bolt	1
4	83338	5/16-18 Lock Nut	1
5	891373	Door Hinge Pad	2
6	83045A	Washer, 3/8” ID x 7/8” OD	2
7	83274	3/8-16 Lock Nut	2
8	86643	Tube, Secondary Air (Ø0.16 holes)	1
9	86645	Tube, Secondary Air (Ø0.22 holes)	2
10	25843	Retainer, Tube (1 per Secondary Tube)	3 - 5
11	88145	Refractory Insulation	1
12	891929	Damper Rod	1
13	891331	Spring Handle - Small	1
14	25826	Hearth Plate	1
15	25844	Shield, Rear	1
16	25845	Air Deflector	1
17	40292A	Flue Collar	1
18	88042	Flue Collar Gasket	1.7 Ft
19	83432	5/16-18 x 1-1/2 Hex Head Bolt	3
20	83045	Washer, 5/16” ID x 3/4” OD	3
21	83431	Weld Tab	3
22	89066	Firebrick (4.5 x 9 x 1.25)	23

Key	Part No.	Description	Qty.
23	891414	Firebrick (2-1/4 x 9)	2
24	24103	Firebrick (4-1/2 x 4-1/2)	1
25	891783	Firebrick (3 x 4-1/2)	1
26	40561	Ash Plug	1
27	25855	Pedestal Front	1
28	25857	Pedestal, Left Side	1
29	25856	Pedestal, Right Side	1
30	25854	Pedestal Bottom	1
31	25846	Pedestal Back	1
32	25853	Pedestal Brace	1
33	69773	Ash Pan	1
34	891137	Handle	1
35	69778	Trim, One Piece	1
36	891492	B36 Blower Assembly	1
N/S = Not Shown			

Key	Part No.	Description	Qty.
1	25491	Feed Door, Painted (40484)	1
2	25692	Handle, Painted (40515)	1
3	83506	3/8 x 1-1/4 Roll Pin	1
4	891135	Spring Handle - LG	1
5	88066	Rope Gasket - 5/8”	4.6 Ft
6	88087	Gasket	4FT
7	891131	Ceramic Glass	1
8	25464	Top Glass Retainer	1
9	25465	Bottom Glass Retainer	1
10	83202	10-24 x 3/8 Pan Head Phillips Screw	4
11	83278	Washer - 7/32 ID x 1/2 OD	4

IN ORDER TO MAINTAIN WARRANTY, COMPONENTS MUST BE REPLACED USING ORIGINAL MANUFACTURERS PARTS PURCHASED THROUGH YOUR DEALER OR DIRECTLY FROM THE APPLIANCE MANUFACTURER.
USE OF THIRD PARTY COMPONENTS WILL VOID THE WARRANTY.

For Models with Legs			
Key	Part No.	Description	Qty.
⇦	40566	Leg, Cast Iron	2
N/S	83339	Bolt, 1/4-20 x 3/4	8

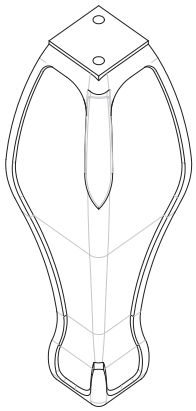

NOTES

HOW TO ORDER REPAIR PARTS

THIS MANUAL WILL HELP YOU OBTAIN EFFICIENT, DEPENDABLE SERVICE FROM YOUR HEATER, AND ENABLE YOU TO ORDER REPAIR PARTS CORRECTLY.

KEEP THIS MANUAL IN A SAFE PLACE FOR FUTURE REFERENCE.

WHEN WRITING, ALWAYS GIVE THE FULL MODEL NUMBER WHICH IS ON THE NAMEPLATE ATTACHED TO THE HEATER.

WHEN ORDERING REPAIR PARTS, ALWAYS GIVE THE FOLLOWING INFORMATION AS SHOWN IN THIS LIST:

1. THE PART NUMBER
2. THE PART DESCRIPTION
3. THE MODEL NUMBER: _____
4. THE SERIAL NUMBER: _____

UNITED STATES STOVE COMPANY
227 INDUSTRIAL PARK ROAD
P.O. BOX 151
SOUTH PITTSBURG, TN 37380
800-750-2723
WWW.USSTOVE.COM