NOTES

1.) (12) 1/8-27 NPT STAINLESS STEEL DRAIN PLUGS; 4 IN C-FACE
4 IN OPPOSITE SHAFT END ENDSHIELD AND 3 IN CONDUIT BOX.

2.) 303 STAINLESS STEEL SHAFT KEY TAPED TO MOTOR.

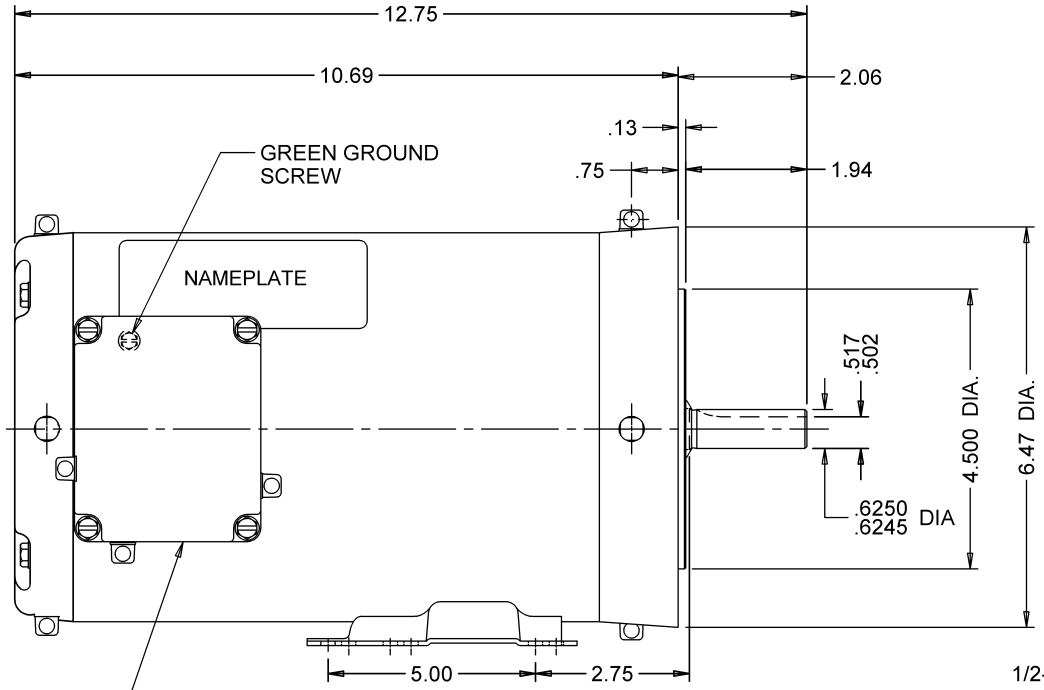

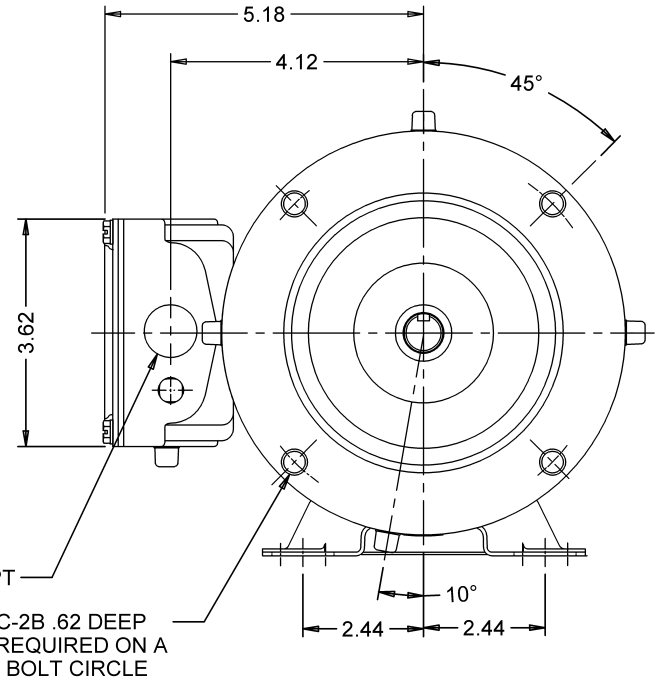

MODEL	REF	CUSTOMER	HP	VOLTS	AMPS	HZ	RPM	ROTATION	CUSTOMER PN
P63TLD-4008		USEM	3/4	208-230/460	2.8-2.7/1.3	60	1725	REVERSIBLE	WDP34S2AHC

SHEET NUMBER	REV	REVISION RECORD FOR: C4997-13
1 OF 1	E	UPDATED BACKGROUND FROM EMERSON TO NIDEC
REVISION DATE		
15-FEB-12		

INFORMATION DISCLOSED ON THIS DOCUMENT IS CONSIDERED PROPRIETARY AND SHALL NOT BE REPRODUCED OR DISCLOSED WITHOUT WRITTEN CONSENT OF NIDEC MOTOR CORPORATION

NIDEC MOTOR CORPORATION

ALL DIMENSIONS ARE FOR REFERENCE ONLY UNLESS TOLERANCE IS GIVEN

ISSUED BY	REVIEWED BY	ENGINEER APPROVED
A. SANCHEZ	J.I. SALAZAR	J.I. SALAZAR

TITLE	CODE	ITEM NO.	SIZE
ASSEMBLED VIEW	V01	740254	B

REV E

NIDEC MOTOR CORPORATION 15-Feb-12

V01_NMCB (MAR-2011)

SOLIDEDGE