EFFECTIVE: 07-MAY-12	HORIZONTAL MOTORS TOTALLY ENCLOSED FAN COOLED FRAME: 280T BASIC TYPE: CT	PRINT: 07-2781-02
SUPERSEDES: 13-JAN-12		SHEET: 1 OF 1

F-2 ASSEMBLY

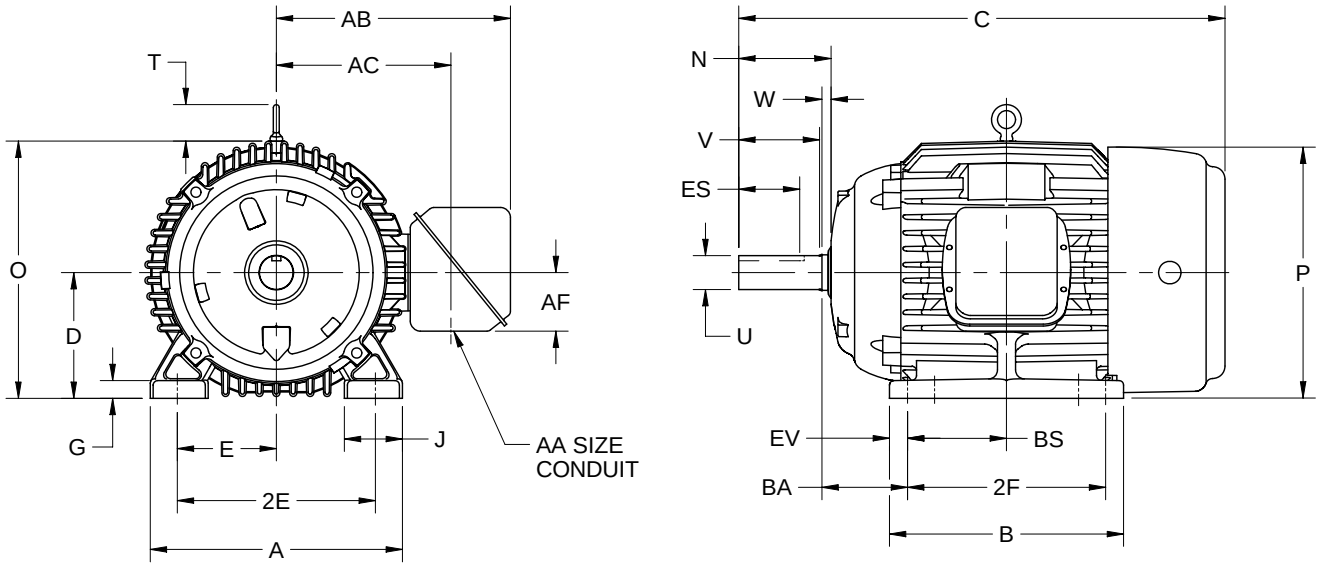

ALL DIMENSIONS ARE IN INCHES AND MILLIMETERS

	A	B	C	D -.06	E	2E ±.03	G	H +.05	J
IN	14.00	13.00	27.00	7.00	5.50	11.00	1.00	.53	3.25
MM	356	330	686	178	140	279	25	14	83

	N	O	P [2]	T	U -.001	V MIN	W	AA	AB
IN	5.00	14.31	14.63	2.06	1.875	4.38	.50	2.00	13.00
MM	127	363	372	52	47.63	111	13		330

	AC	AF	BA	BS	ES MIN	EV	SQ KEY
IN	9.69	3.25	4.75	5.50	3.28	1.00	.500
MM	246	83	121	140	83	25	12.70

	FRAME	2F ±.03
IN	284T	9.50
MM		241
IN	286T	11.00
MM		279

1. DIMENSIONS MAY VARY BY .25" DUE TO CASTING AND/OR FABRICATION VARIATIONS.
2. LARGEST MOTOR WIDTH.
3. TOLERANCES SHOWN ARE IN INCHES ONLY.
4. CONDUIT BOX MAY BE LOCATED ON EITHER SIDE OF MOTOR CONDUIT OPENINGS MAY BE LOCATED IN STEPS OF 90 DEGREES REGARDLESS OF LOCATION. STANDARD AS SHOWN WITH CONDUIT OPENING DOWN.

Nidec Motor Corporation
St. Louis, Missouri

INFORMATION DISCLOSED ON THIS DOCUMENT IS CONSIDERED PROPRIETARY AND SHALL NOT BE REPRODUCED OR DISCLOSED WITHOUT WRITTEN CONSENT OF NIDEC MOTOR CORPORATION

ISSUED BY R. KING
APPROVED BY J. O'BRIEN

IHP_DP_NMCA (MAR-2011) SOLIDEDGE