105279

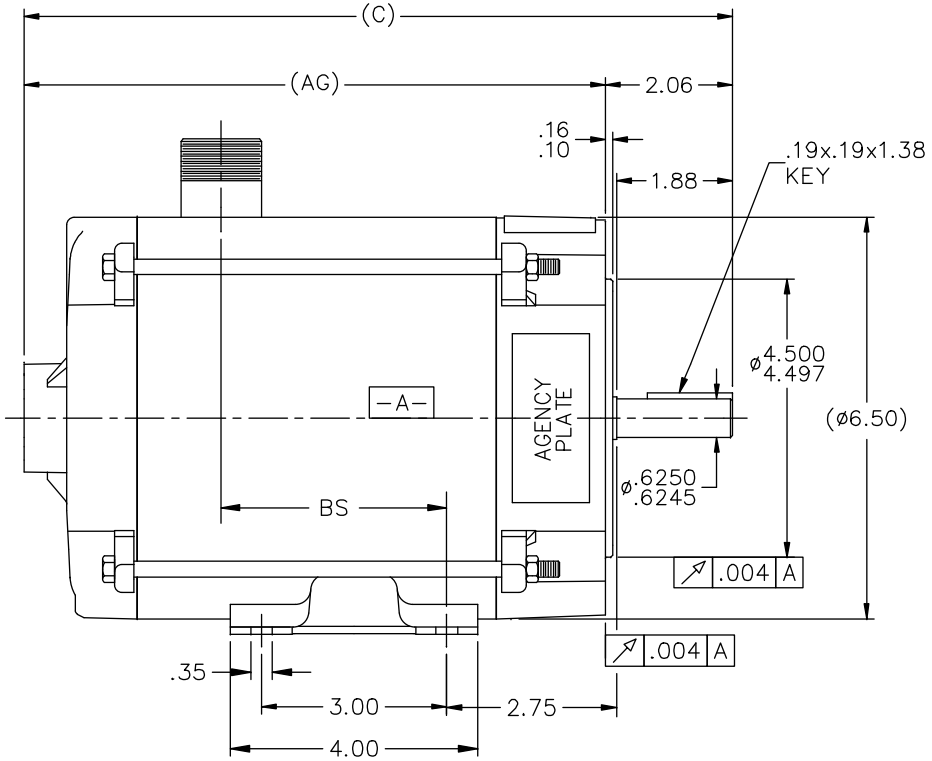

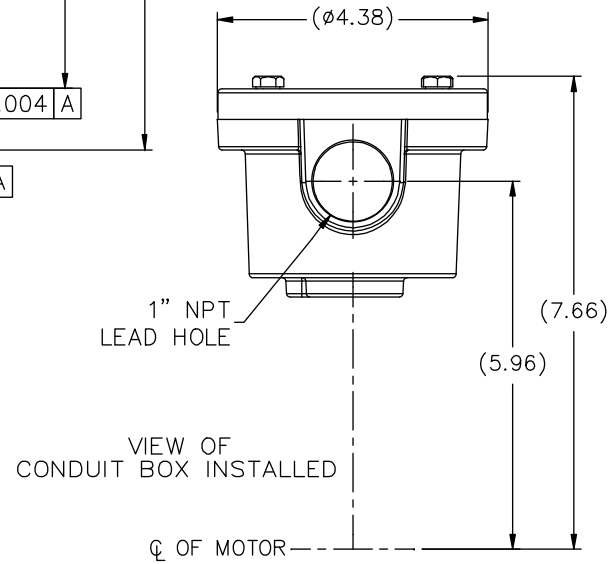

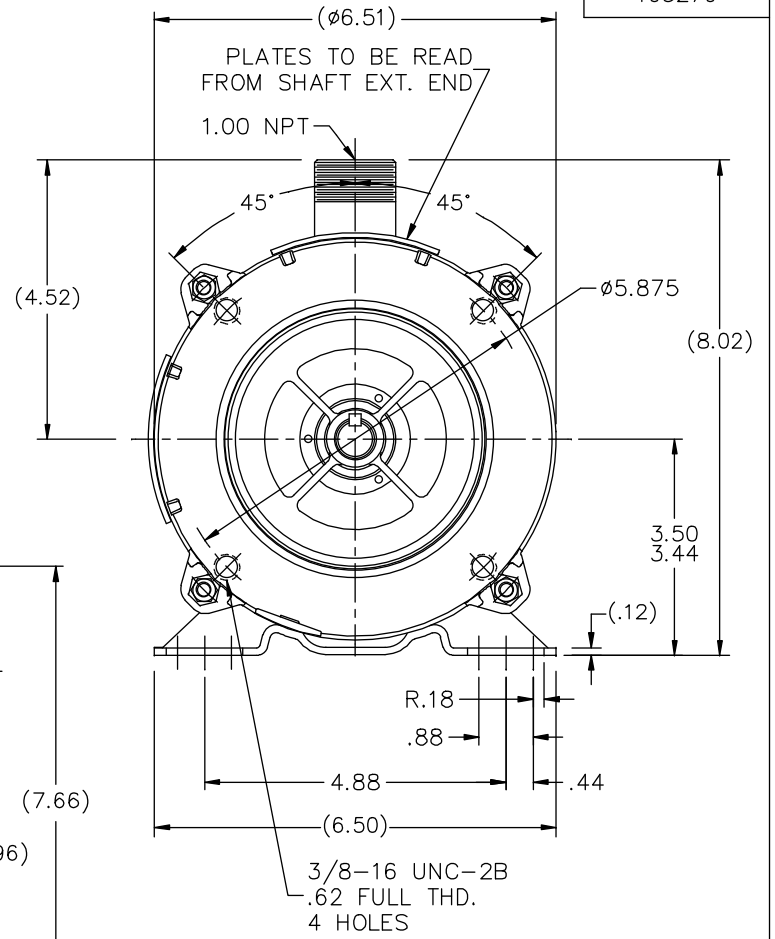

DASH	(C)	(AG)	BS		
631	11.97	9.91	4.15		
681	12.47	10.41	4.65		
731	12.97	10.91	5.15		
781	13.47	11.41	5.65		
831	13.97	11.91	6.15		
881	14.47	12.41	6.65		
931	14.97	12.91	7.15		
981	15.47	13.41	7.65		

NO.	REVISION	BY & DATE	CHK	ANG	±7'30"
5	REVISED AK DIA ECR–0044440	SVL 11–06–2013		DEC.	INCHES
4	REVISED C'BOX PER CN40784A	JJB 02/23/2007	ML	.X	±.1
3	REDRAWN ON AUTOCAD	DRS 08–16–2005	ML	.XX	±.03
2	ROTATED C'BOX IN INSTALLED VIEW	MSG 12–28–2001	ML	.XXX	±.005
1	NEW DRAWING MU39767	DRS 12–21–2001	ML	.XXXX	±.0005

TOLERANCES UNLESS SPECIFIED

MARATHON ELECTRIC

TITLE OUTLINE – C'FACE
56 FR. – EXP. PR. – EPNV

MAT'L.
FINISH
CAD FILE 105279

DRAWN DRS 12–13–2001
CHK ML 12–20–2001
APPD SAS 12–21–2001
SCALE 1=2
REF
FMF
PREV

RFP
DIST WP

SIZE B
DRAWING NO. 105279
PAGE OF
REV. 5