Uncontrolled Copy

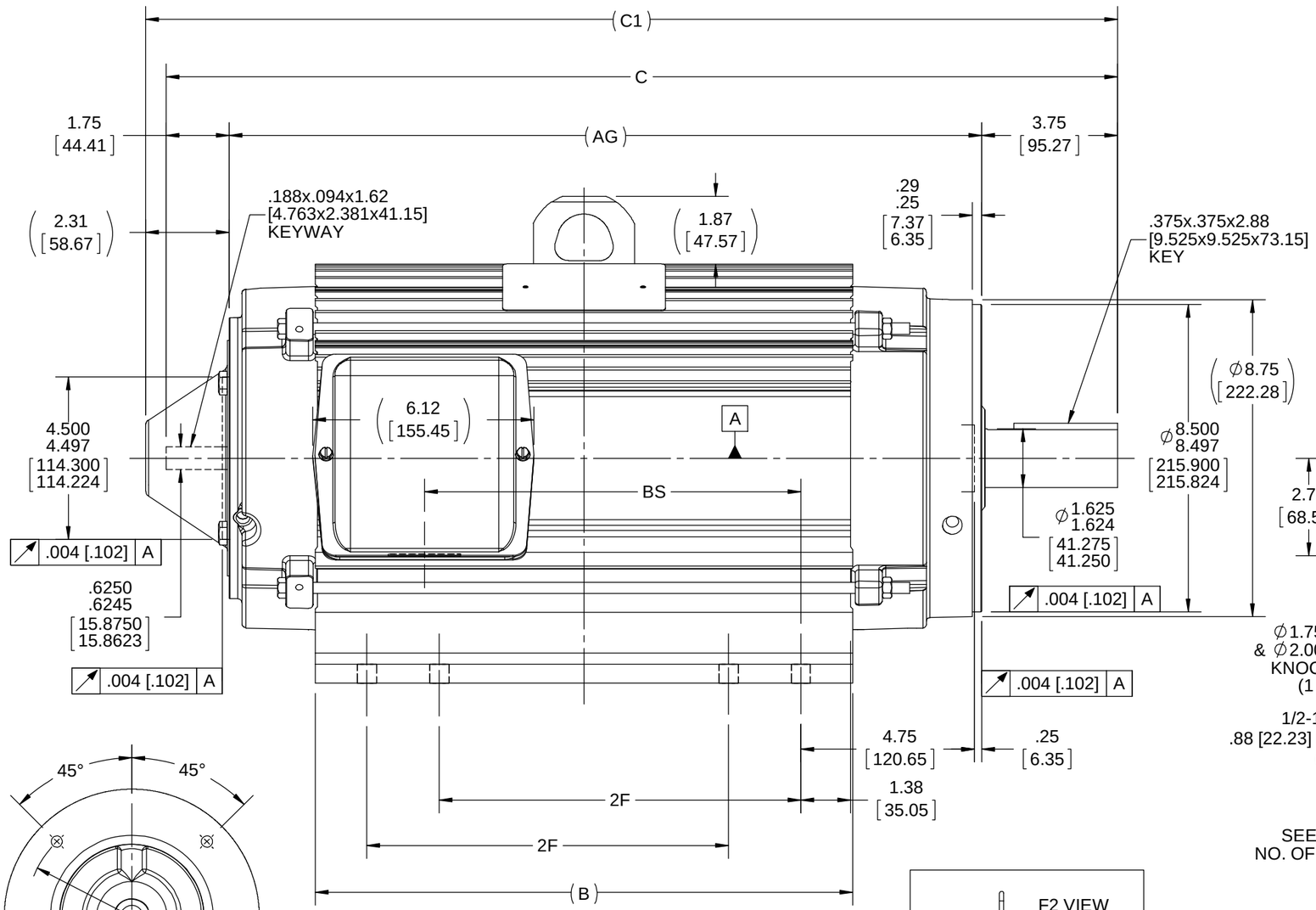

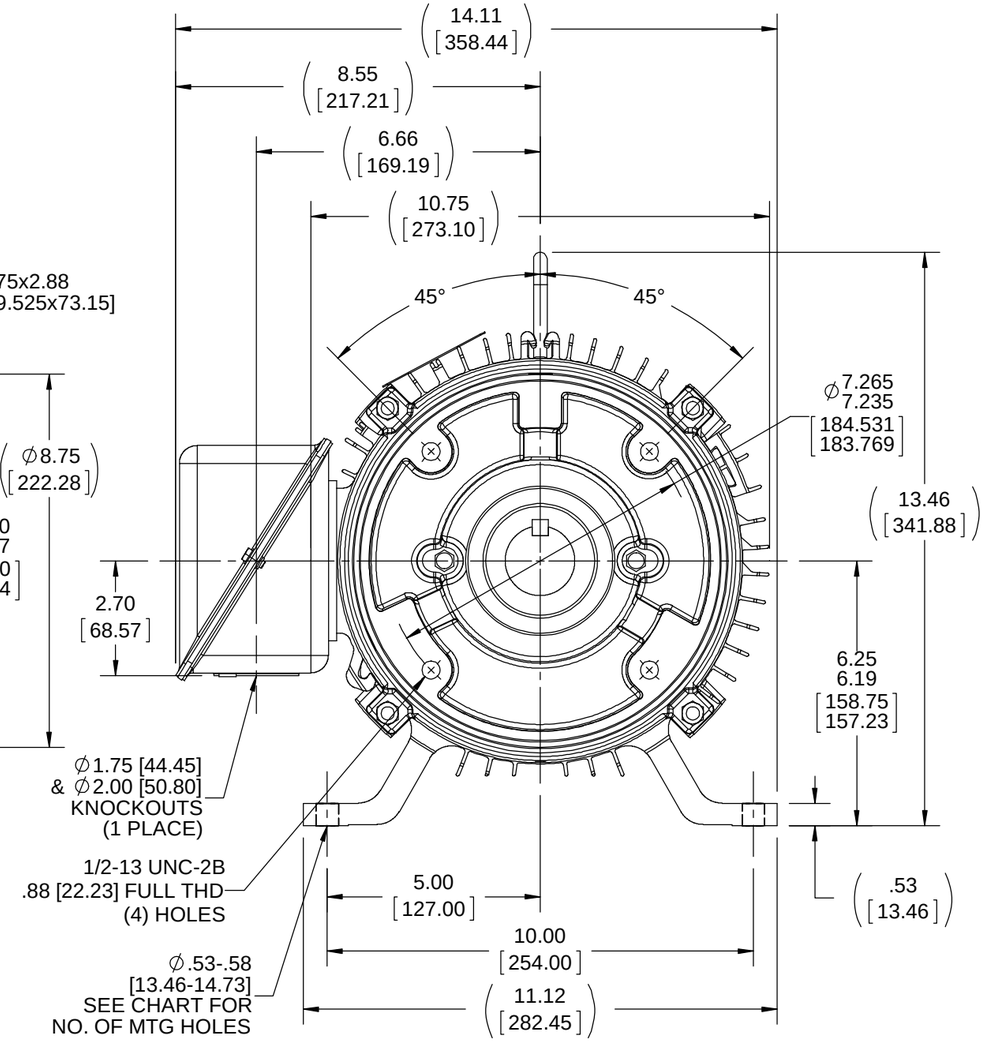

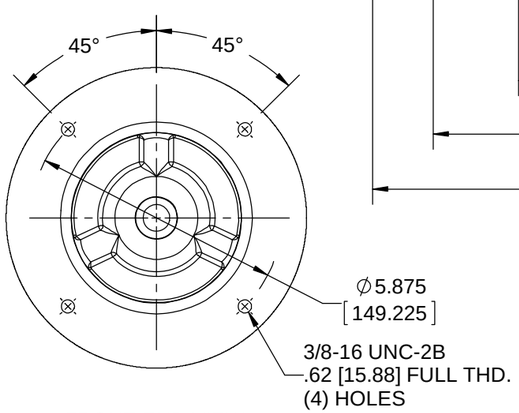

FRONT END VIEW
(SHAFT COVER REMOVED)

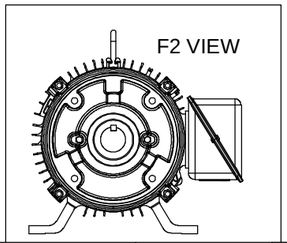

1325	254	25.37 [644.44]	24.81 [630.17]	19.31 [490.50]	13.37 [339.60]	8.25 [209.55]	8.90 [226.06]	YES	8
1475	254	26.87 [682.54]	26.31 [668.27]	20.81 [528.60]	14.87 [377.70]	8.25 [209.55]	10.40 [264.16]	YES	8
DASH	FRAME	C1	C	AG	B	2F	BS	F1/F2	MTG HOLES

NOTES:
1. CONDUIT BOX CAN BE ROTATED IN 90˚ STEPS.
2. SEE CHART FOR "F2" CAPABILITY. IF YES, BOX CAN BE MOUNTED ON OPPOSITE SIDE BY REMOVING BRACKETS AND TURNING FRAME 180˚.
3. NAMEPLATE READ FROM CONDUIT BOX SIDE OF MOTOR.

DRAWING REVISION	REVISION BY	DATE
F	W. JOERGER	01-19-2018
ECO: ECO-0131008	APPROVED BY: E. HEIL	DATE: 01-19-2018

ECO DESCRIPTION: REMOVED 256 FRAME DASH -1475

COPYRIGHT REGAL BELOIT AMERICA, INC. ALL RIGHTS RESERVED.
PROPRIETARY AND CONFIDENTIAL INFORMATION - THIS DOCUMENT IS THE PROPERTY OF REGAL BELOIT AMERICA, INC. ("OWNER") AND CONTAINS OWNER'S PROPRIETARY INFORMATION. ANY PERSON, CORPORATION OR OTHER FIRM RECEIVING IT IS DEEMED, BY RECEIVING IT, TO AGREE THAT IT, AND/OR ANY PART OF IT, SHALL NOT BE DISCLOSED TO ANY PERSON, CORPORATION OR OTHER ENTITY, DUPLICATED, AND/OR USED, EXCEPT AS EXPRESSLY APPROVED IN WRITING IN ADVANCE BY OWNER. THIS DOCUMENT SHALL BE RETURNED TO OWNER UPON REQUEST. IT MAY BE SUBJECT TO CERTAIN RESTRICTIONS UNDER APPLICABLE EXPORT CONTROL LAWS AND REGULATIONS.

TOLERANCES UNLESS OTHERWISE SPECIFIED:

DEC.	INCH	mm	ANGLE
.X	±0.1	[±2.5]	±7' 30"
.XX	±0.03	[±0.76]	
XXX	±0.005	[±0.127]	
.XXXX	±0.0005	[±0.0127]	

REMOVE BURRS & BREAK SHARP EDGES: .003/.015 [.076/.381] X 45 °
CORNER FILLETS: R.02 [.51]
MACHINED SURFACES: 200 INCH / 5.1 mm
mm SHOWN IN [BRACKETS]

DRAWN BY	MJK
DATE	04-18-2005
APPROVED BY	CGD
DATE	08-18-2005
REFERENCE	
THIRD ANGLE PROJECTION	

REGAL™ Regal Beloit America, Inc.

DESCRIPTION: OUTLINE
210 FR. - 254 MTG - ALUMINUM FRAME

MATERIAL | PROCESS/FINISH

SIZE: B | DRAWING NUMBER: SS330110 | SHEET: 1 OF 1