104585

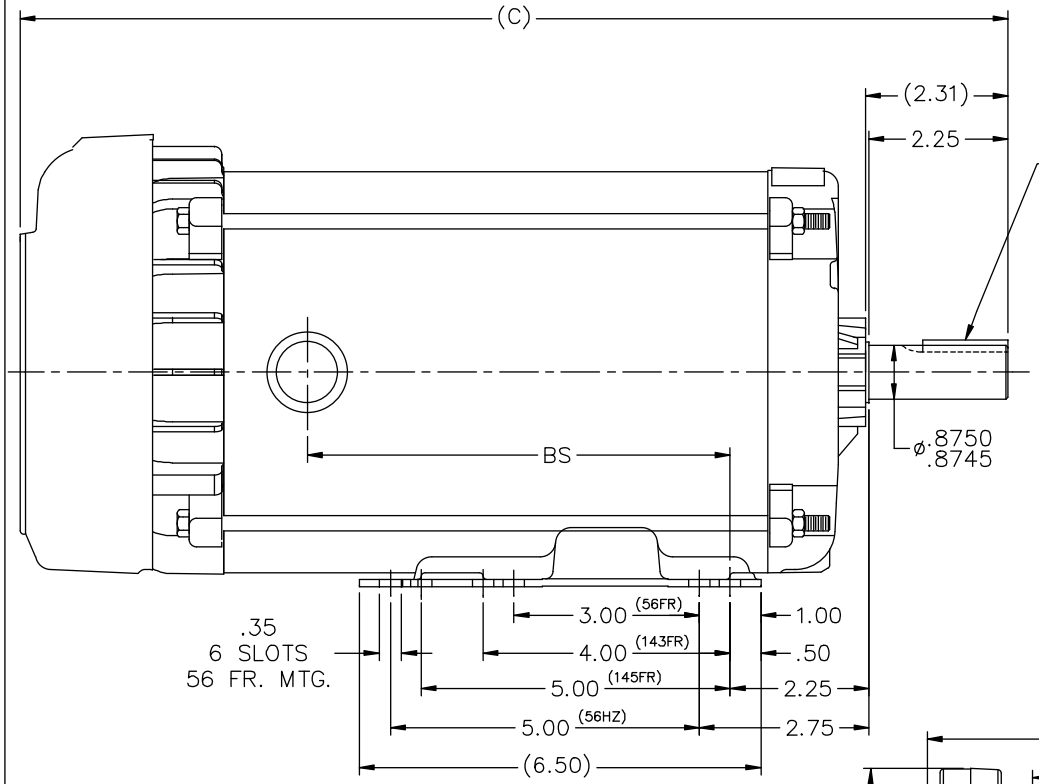

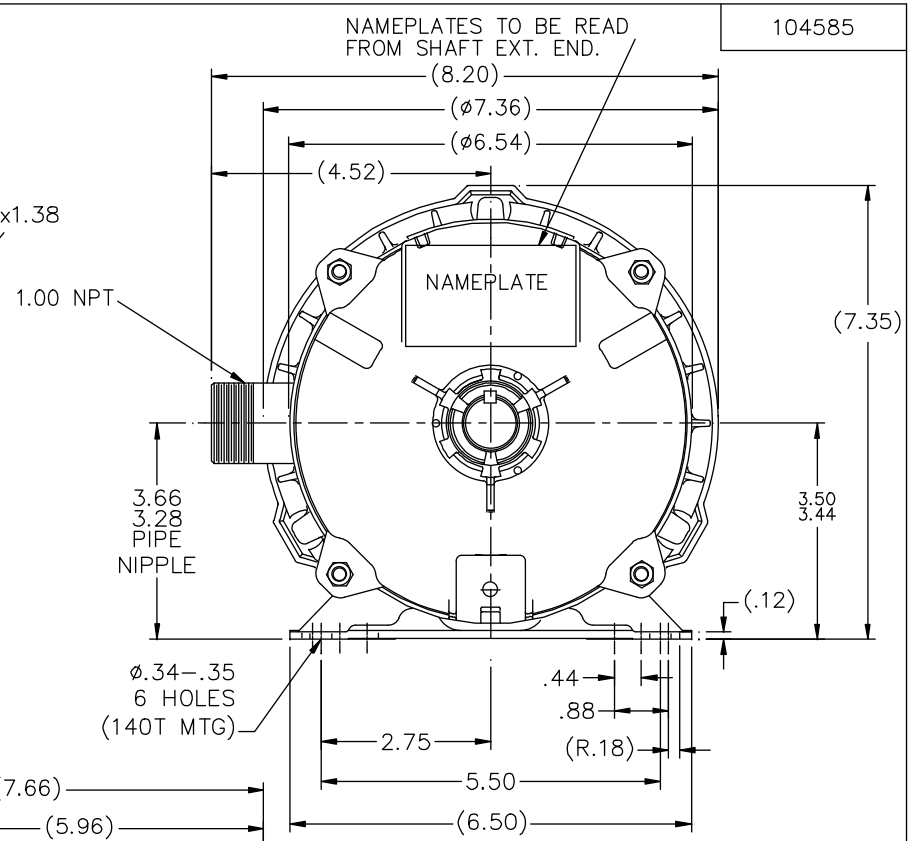

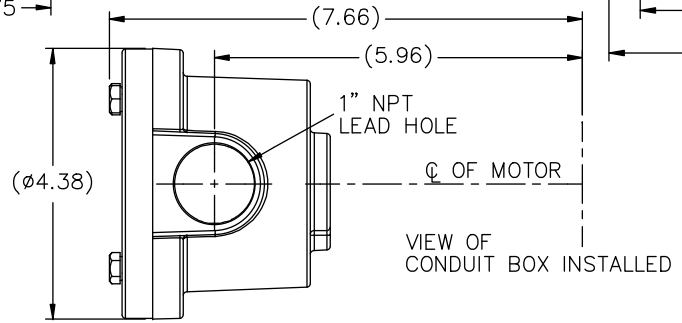

CONDUIT BOX NEEDED FOR MODELS GREATER THAN $1\frac{1}{2}$ H.P.

DASH	(C)	BS			
681	14.00	4.84			
731	14.50	5.34			
781	15.00	5.84			
831	15.50	6.34			
881	16.00	6.84	SHOWN		
931	16.50	7.34			
981	17.00	7.84			

NO.	REVISION	BY & DATE	CHK
3	REVISED C'BOX PER CN40784A	JJB 02/23/2007	ML
2	REDRAWN IN AUTOCAD, REMOVED –631 CN 46098	MJK 06/17/2005	
1	NEW DRAWING MU 24921	BLR 05-12-1999	

TOLERANCES UNLESS SPECIFIED

DEC.	INCHES
.X	±.1
.XX	±.03
.XXX	±.005
.XXXX	±.0005
ANG	±7'30"

MARATHON ELECTRIC

TITLE OUTLINE
140 FR. – EXP. PR. – TEFC – 1ø & 3ø

MAT'L.
FINISH
CAD FILE 104585

DRAWN BLR 05-10-1999
CHK ML 05-11-1999
APPD JM 05-12-1999
SCALE 1=2
REF
FMF
PREV

SIZE B | DRAWING NO. 104585 | PAGE OF | REV. 3

RFP
DIST WP