52A111799

CONTINUED ON 52A106909

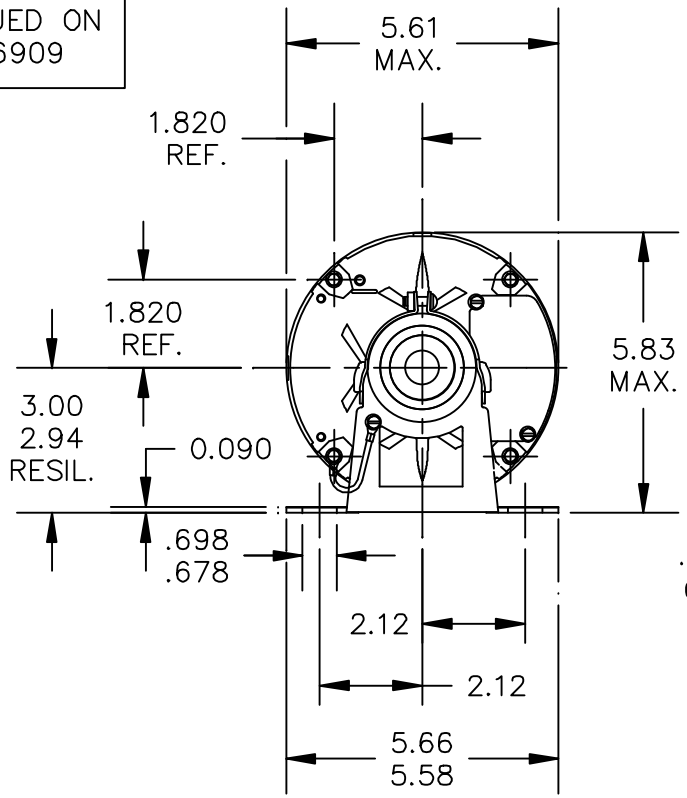

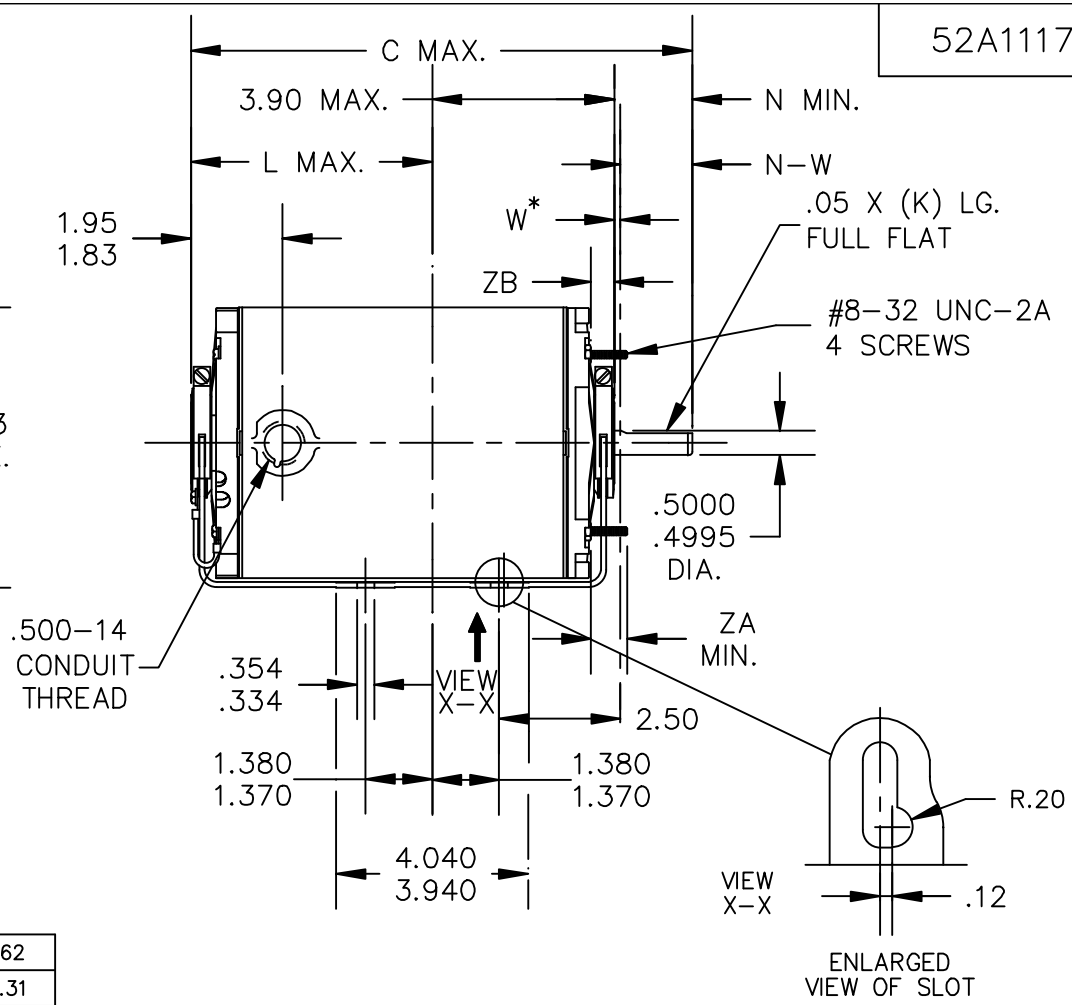

P	TYPE	RBC SIZE	NEMA FR	C	K	L	N	N–W	ZB	ZA
7	K	36	48Z	10.50	1.66	4.65	2.00	2.13/1.91	.55/.52	.62
6	KH	32	48	8.94	1.16	3.59	1.50	1.63/1.41	.55/.52	1.31
5	KH	37	48	10.40	1.16	5.05	1.50	1.63/1.41	.55/.52	.62
4	KH	36	48	10.00	1.16	4.65	1.50	1.63/1.41	.55/.52	.62
3	KH	35	48	9.57	1.16	4.22	1.50	1.63/1.41	.55/.52	.62
2	KH	33	48	9.19	1.16	3.84	1.50	1.63/1.41	.55/.52	.62
1	KH	32	48	8.94	1.16	3.59	1.50	1.63/1.41	.55/.52	.62

W* IS A CLEARANCE DUE TO VARIATION IN PARTS AND ASSEMBLY.

NO.	REVISION	BY & DATE	CHK
01	CHG GD LD FROM 4:30 TO 7:30 PER IS11–0510 & REDRAWN IN DRAFT SIGHT.	UD 09/24/12	PKG

TOLERANCES UNLESS SPECIFIED

DEC.	INCHES
.X	±0.1
.XX	±0.02
.XXX	±0.005
.XXXX	±0.0005
ANG	±1.0

REGAL BELOIT — REGAL-BELOIT CORPORATION

TITLE: OUTLINE
TENV–RESIL BASE

MAT'L.
FINISH
RFP
CAD FILE 52A111799
DIST

DRAWN	BM 10/11/07
CHK	
APPD	PKG 10/11/07
SCALE	1=1
REF	
FMF	
PREV	

SIZE A — DRAWING NO. 52A111799 — REV. 01