Uncontrolled Copy

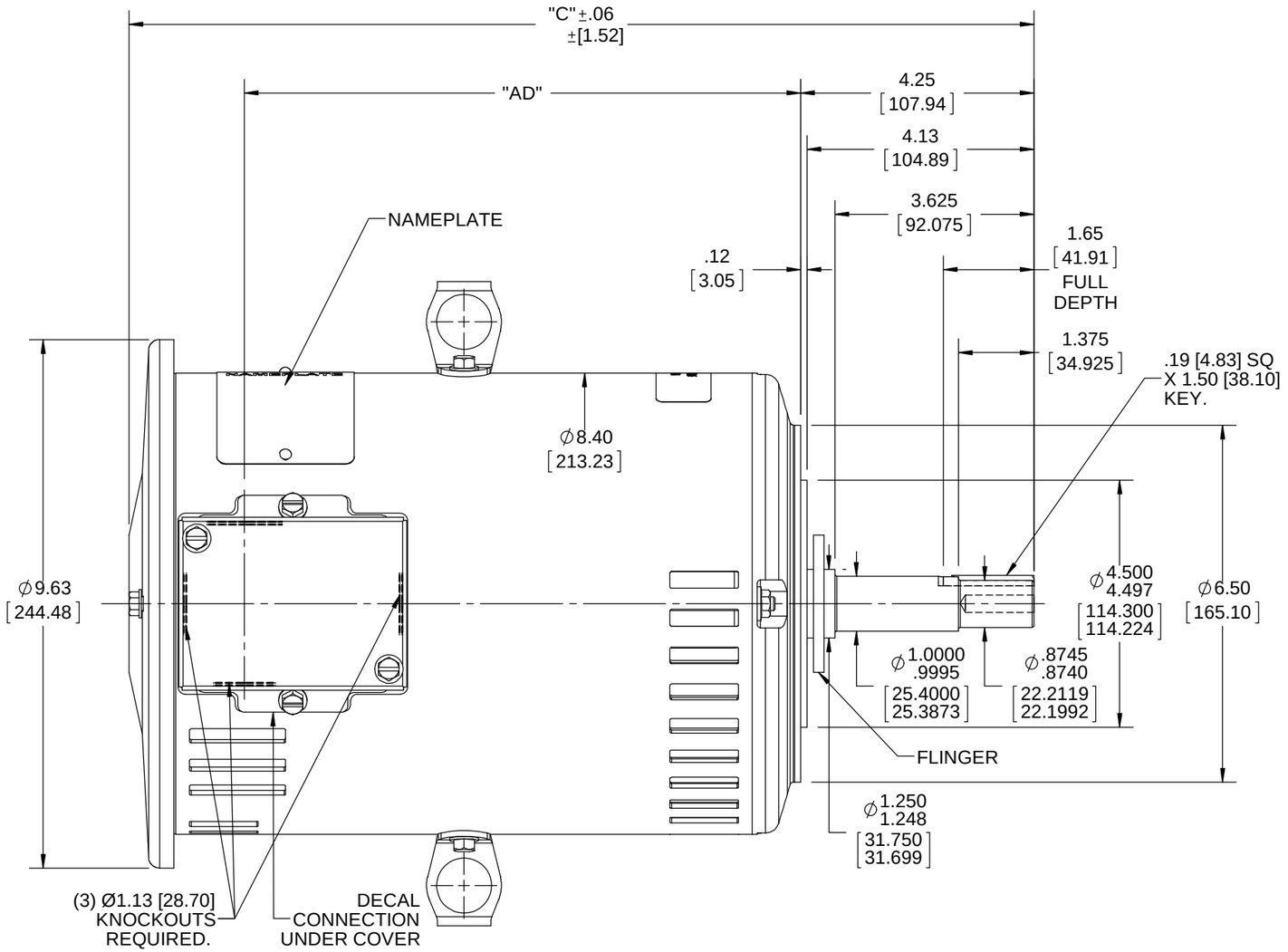

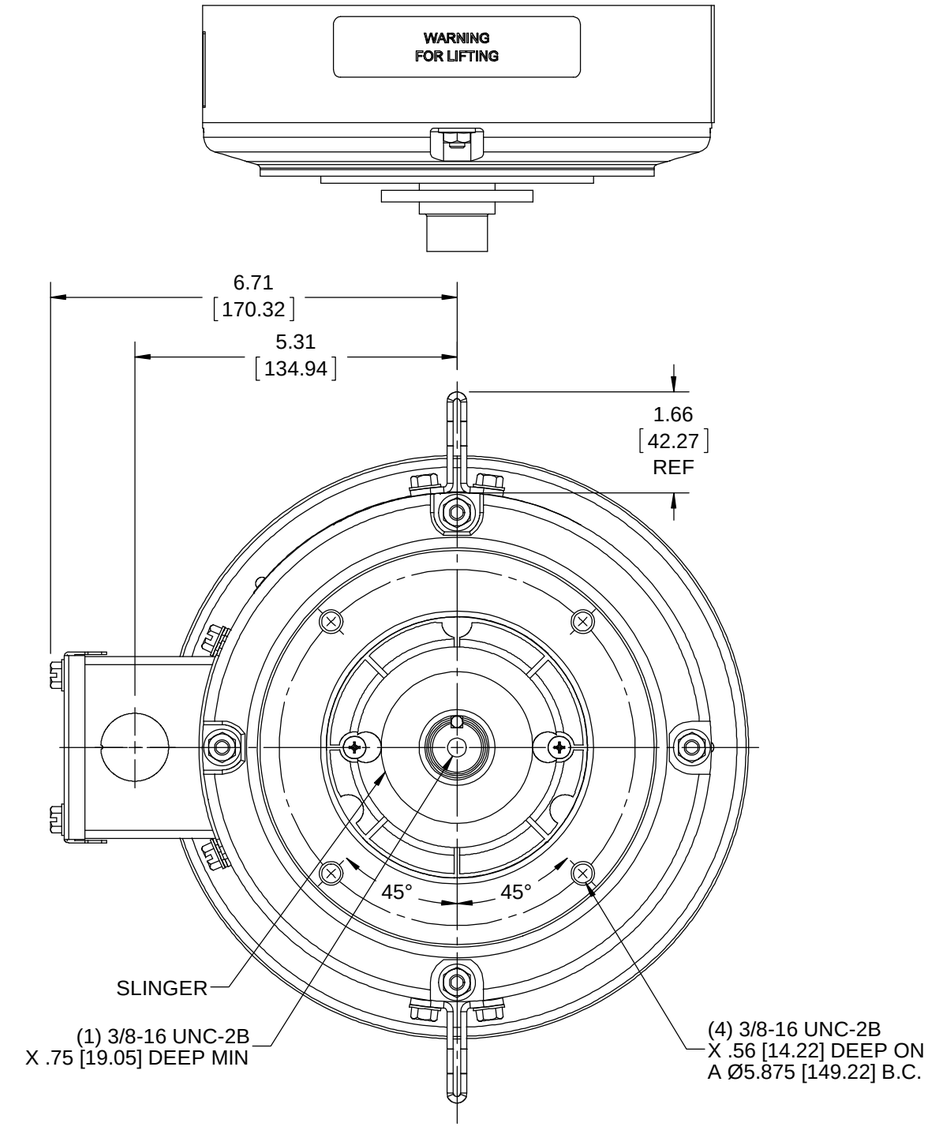

NOTE:-
1) GASKET THROUGHOUT.

MAXIMUM FACE RUNOUT TO BE .004 [0.102] T.I.R
MAXIMUM PILOT ECCENTRICITY TO BE .004 [0.102] T.I.R
PERMISSIBLE SHAFT RUNOUT TO BE .004 [0.102] T.I.R.

DASH NO.	"C"	"AD"
850	14.49 [368.05]	8.13 [206.50]
900	14.99 [380.75]	8.63 [219.20]
950	15.49 [396.45]	9.13 [231.90]
1000	15.99 [406.15]	9.63 [244.60]
1050	16.49 [418.85]	10.13 [257.30]
1100	16.99 [421.55]	10.63 [270.00]
1150	17.49 [444.25]	11.13 [282.70]

DRAWING REVISION	REVISION BY	DATE
E	A SUPPANNAVAR	01/30/2018
ECO: ECO-0144874	APPROVED BY: ST	DATE: 05/14/2018

ECO DESCRIPTION
OULINE CONVERSION PROJECT

COPYRIGHT REGAL BELOIT AMERICA, INC. ALL RIGHTS RESERVED.
PROPRIETARY AND CONFIDENTIAL INFORMATION - THIS DOCUMENT IS THE PROPERTY OF REGAL BELOIT AMERICA, INC. ("OWNER") AND CONTAINS OWNER'S PROPRIETARY INFORMATION. ANY PERSON, CORPORATION OR OTHER FIRM RECEIVING IT IS DEEMED, BY RECEIVING IT, TO AGREE THAT IT, AND/OR ANY PART OF IT, SHALL NOT BE DISCLOSED TO ANY PERSON, CORPORATION OR OTHER ENTITY, DUPLICATED, AND/OR USED, EXCEPT AS EXPRESSLY APPROVED IN WRITING IN ADVANCE BY OWNER. THIS DOCUMENT SHALL BE RETURNED TO OWNER UPON REQUEST. IT MAY BE SUBJECT TO CERTAIN RESTRICTIONS UNDER APPLICABLE EXPORT CONTROL LAWS AND REGULATIONS.

TOLERANCES UNLESS OTHERWISE SPECIFIED:

DEC.	INCH	mm	ANGLE
.X	±0.1	[±2.5]	±0.5°
.XX	±0.03	[±0.76]	
.XXX	±0.005	[±0.127]	
.XXXX	±0.0005	[±0.0127]	

REMOVE BURRS & BREAK SHARP EDGES: .003/.015 [.076/.381] X 45 °
CORNER FILLETS: R.02 [.51]
MACHINED SURFACES: 125 INCH / 3.2 mm
mm SHOWN IN [BRACKETS]

DRAWN BY	VV
DATE	17/08/07
APPROVED BY	YS
DATE	17/09/07
REFERENCE	035547
THIRD ANGLE PROJECTION	

REGAL™ Regal Beloit America, Inc.

DESCRIPTION
OUTLINE
180JM FRAME DRIP PROOF-"C" FACE-JM PUMP

MATERIAL | PROCESS/FINISH

SIZE: B | DRAWING NUMBER: 035568 | SHEET: 1 OF 1