107336LE

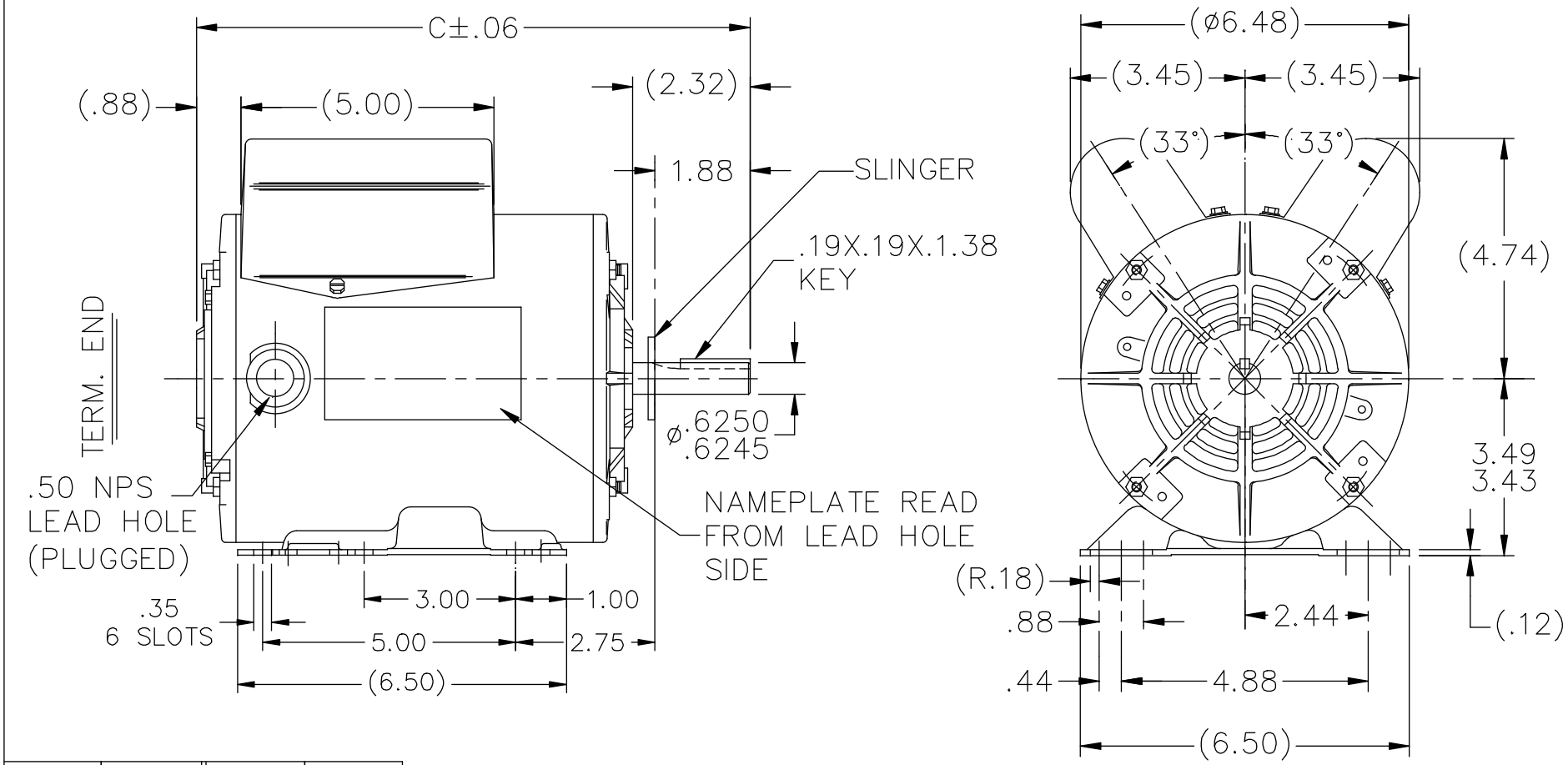

DASH	C	DASH	C
		756	11.44
606	9.94	806	11.94
656	10.44	856	12.44
706	10.94	906	12.94

NO.	REVISION	BY & DATE	CHK

TOLERANCES UNLESS SPECIFIED

DEC.	INCHES
.X	±.1
.XX	±.03
.XXX	±.005
.XXXX	±.0005
ANG	±7'30"

LEESON

ELECTRIC MOTORS
GEARMOTORS
AND DRIVES

TITLE OUTLINE
56 FR. – TE – BB

MAT'L.

FINISH

CAD FILE 107336LE

RFP 01–29–2008

DIST WP

DRAWN	NB 10–18–2007
CHK	VL 01–29–2008
APPD	NB 01–29–2008
SCALE	5=16
REF	100588
FMF	ME070145
PREV	ME070145OL

SIZE A | DRAWING NO. 107336LE | PAGE OF | REV.