169991.00

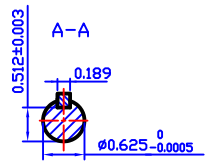

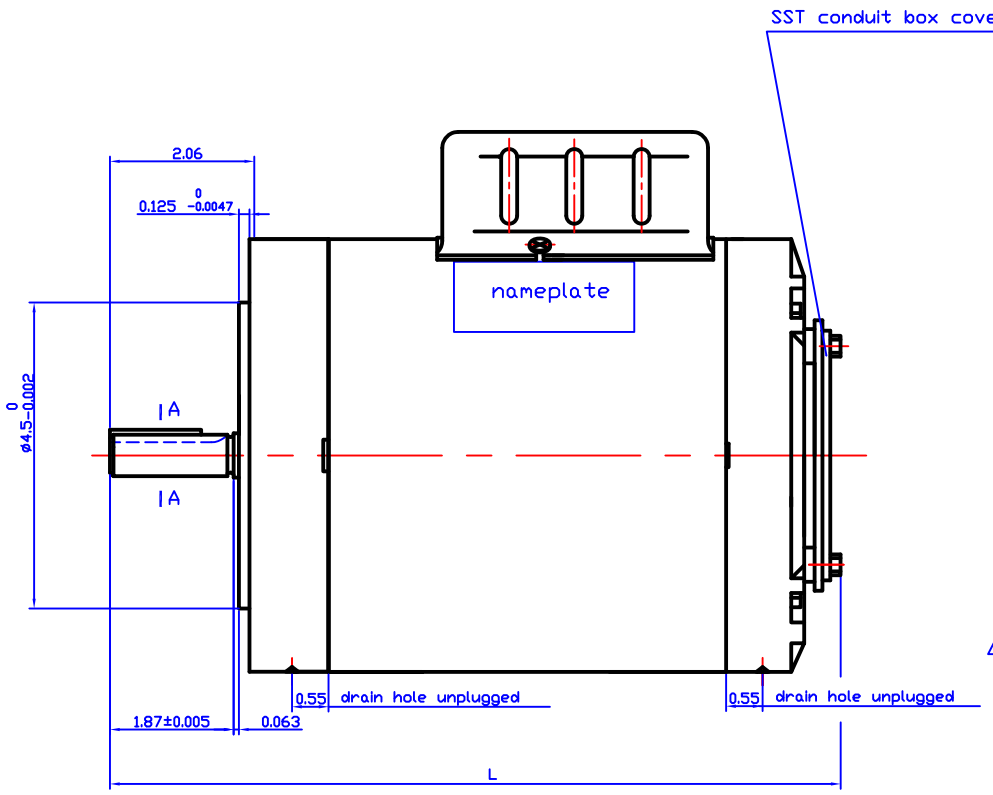

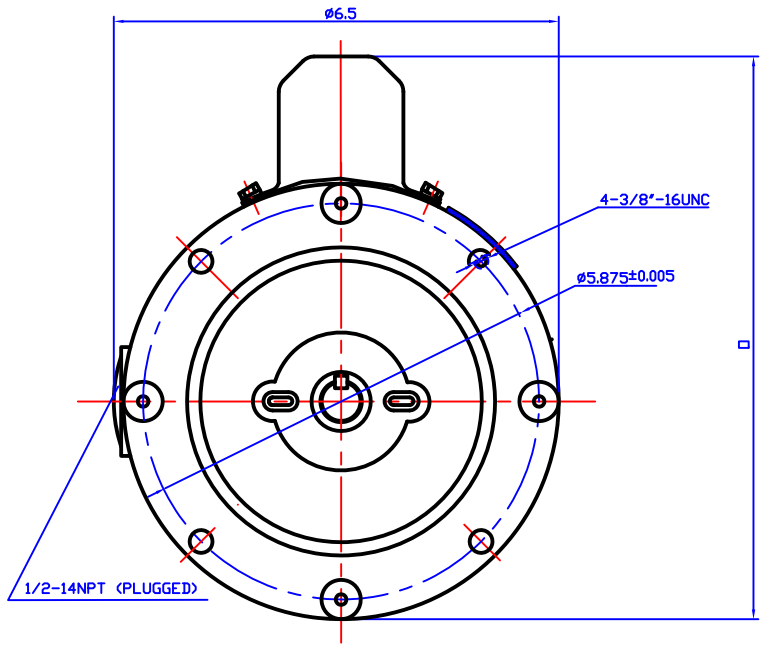

Note:

1. The capacitor leads to be connected using flag terminals.
2. All the hardwares are using SST..
3. Drain holes at 6:00.
4. C flange mounting holes have plugs.

Nameplate exsample of 6439191262

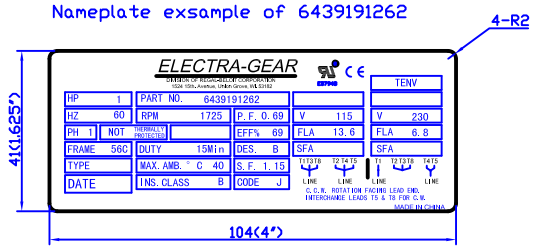

Electra Cat. No.	FRAME	HP	Volt	RPM	Hz	PH	Enclo.	S.F	Duty	thermal protector	L	D
6439191260	56C	1/2	115/230	1725	60	1	TENV	1.15	15Min.	N/A	10.5	8.2
6439191261	56C	3/4	115/230	1725	60	1	TENV	1.15		N/A	11.1	8.6
6439191262	56C	1	115/230	1725	60	1	TENV	1.15		N/A	11.7	8.6

NO.	REVISION	BY & DATE	CH'K'D.

TOLERANCES UNLESS OTHERWISE SPECIFIED

DRAWN
APPR.
R.F.P.
SCALE
REF.
FMF

TITLE 6439191260,6439191261,6439191262 outline drawing

CUSTOMER

DATE 2009.09.29

REV.

DRAWING NO. 169991.00

THIS DRAWING IN DESIGN AND DETAIL IS OUR PROPERTY AND MUST NOT BE USED EXCEPT IN CONNECTION WITH OUR WORK ALL RIGHTS OF DESIGN AND INVENTION ARE RESERVED
THIS IS AN ELECTRONICALLY GENERATED DOCUMENT - DO NOT SCALE THIS PRINT