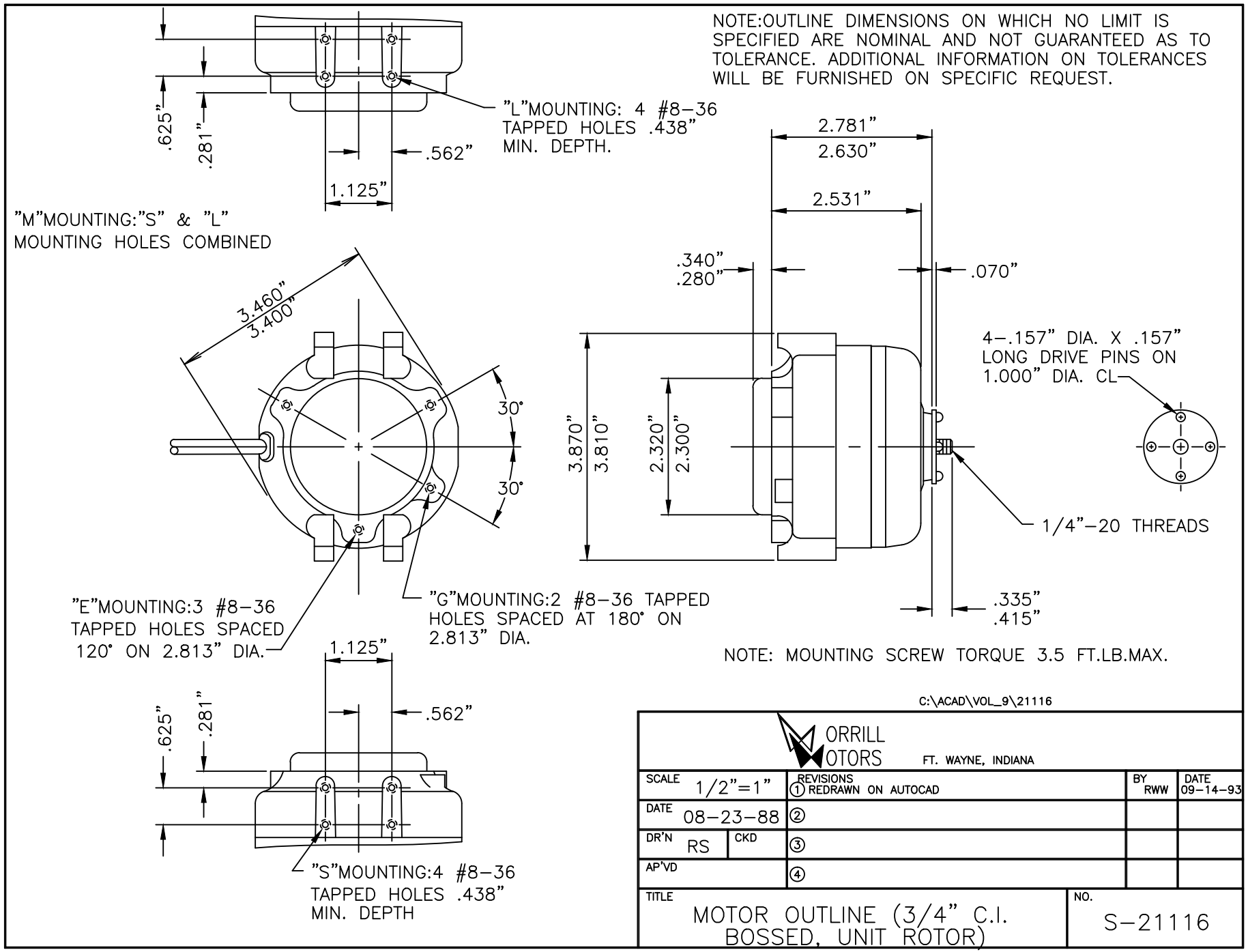Uncontrolled Copy