Uncontrolled Copy

ORACLE REV. 00A

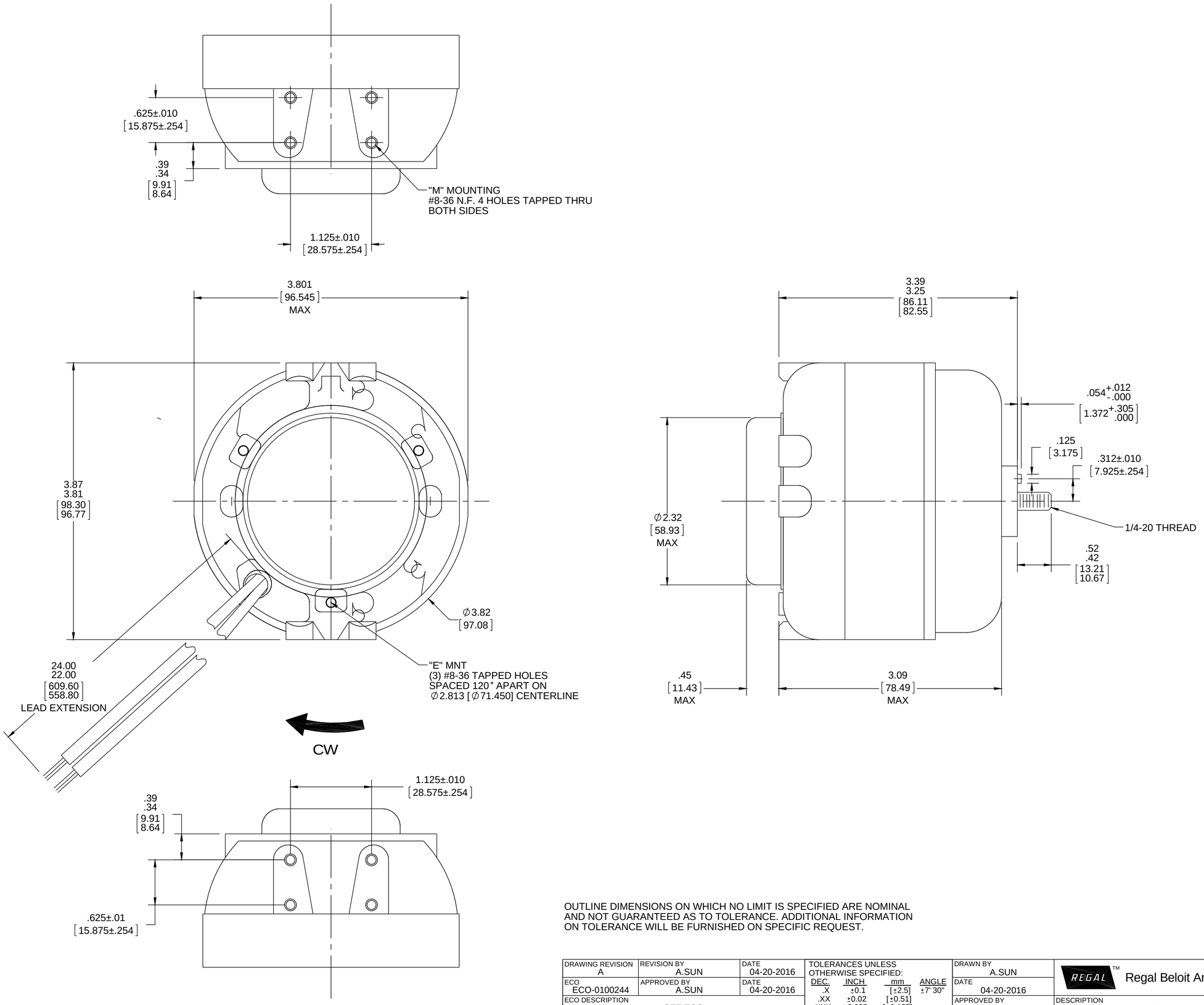

OUTLINE DIMENSIONS ON WHICH NO LIMIT IS SPECIFIED ARE NOMINAL AND NOT GUARANTEED AS TO TOLERANCE. ADDITIONAL INFORMATION ON TOLERANCE WILL BE FURNISHED ON SPECIFIC REQUEST.

DRAWING REVISION	REVISION BY	DATE
A	A.SUN	04-20-2016
ECO	APPROVED BY	DATE
ECO-0100244	A.SUN	04-20-2016
ECO DESCRIPTION	SEE ECO	

COPYRIGHT REGAL BELOIT AMERICA, INC. ALL RIGHTS RESERVED.
PROPRIETARY AND CONFIDENTIAL INFORMATION - THIS DOCUMENT IS THE PROPERTY OF REGAL BELOIT AMERICA, INC. ("OWNER") AND CONTAINS OWNER'S PROPRIETARY INFORMATION. ANY PERSON, CORPORATION OR OTHER FIRM RECEIVING IT IS DEEMED, BY RECEIVING IT, TO AGREE THAT IT, AND/OR ANY PART OF IT, SHALL NOT BE DISCLOSED TO ANY PERSON, CORPORATION OR OTHER ENTITY, DUPLICATED, AND/OR USED, EXCEPT AS EXPRESSLY APPROVED IN WRITING IN ADVANCE BY OWNER. THIS DOCUMENT SHALL BE RETURNED TO OWNER UPON REQUEST. IT MAY BE SUBJECT TO CERTAIN RESTRICTIONS UNDER APPLICABLE EXPORT CONTROL LAWS AND REGULATIONS.

TOLERANCES UNLESS OTHERWISE SPECIFIED:

DEC.	INCH	mm	ANGLE
.X	±0.1	[±2.5]	±7' 30"
.XX	±0.02	[±0.51]	
.XXX	±0.005	[±0.127]	
.XXXX	±0.0005	[±0.0127]	

REMOVE BURRS & BREAK SHARP EDGES: .003/.015 [.076/.381] X 45°
CORNER FILLETS: R.02 [.51]
MACHINED SURFACES: 200 INCH / 5.1 mm
mm SHOWN IN [BRACKETS]

DRAWN BY	A.SUN
DATE	04-20-2016
APPROVED BY	A.SUN
DATE	04-20-2016
REFERENCE	ESPL35EM2
THIRD ANGLE PROJECTION	

Regal Beloit America, Inc.

DESCRIPTION: MODEL-SFHP-UB

MATERIAL	PROCESS/FINISH
-	-

SIZE	DRAWING NUMBER	SHEET
C	UB576	1 OF1