Uncontrolled Copy

03	CHANGE TO HEX HEAD SCREWS AND MOVE TAPE NOTE TO STATOR PRINT.	4003896 KSA 12/02/11	04	UPDATED PERFORMANCE.	4007828 JMC 01/08/13	03	ADDED ENDPLAY NOTE MARKER.	4012282 MLS 4/22/2014	STANDARD TOLERANCES: ANGULAR +/- 1 DEGREE 2 PLACE DECIMAL +/- .01 3 PLACE DECIMAL +/- .005

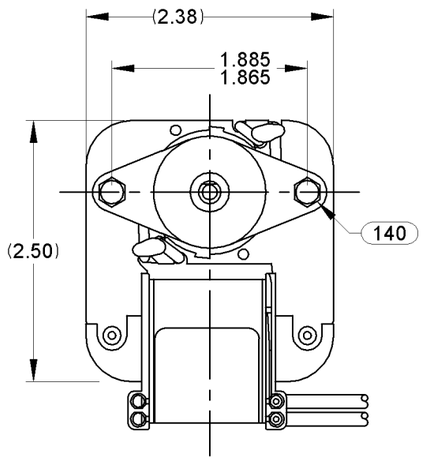

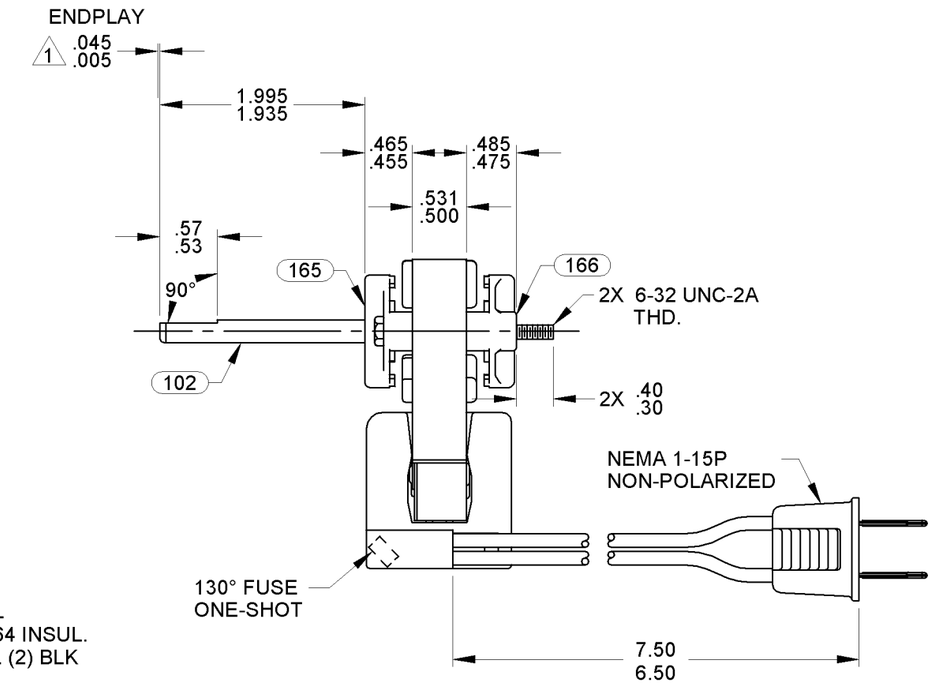

LEAD MATERIAL
18 GA. 125°C 2/64 INSUL.
X-LINKED POLY. (2) BLK

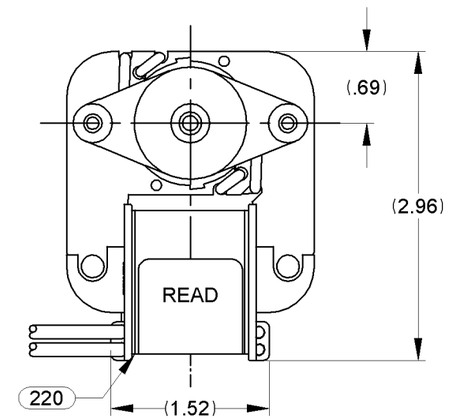

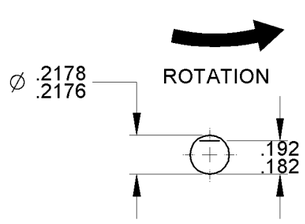

SHAFT DETAIL

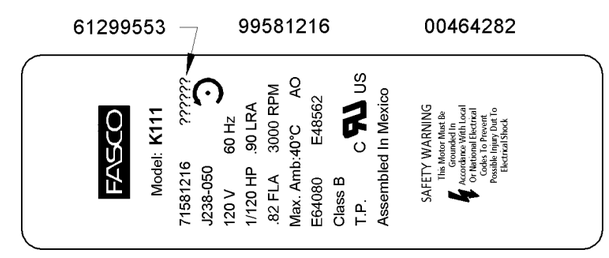

NOTES:
1. SHAFT EXTENSION MEASURED WITH END PLAY PUSHED IN.
2. SHIM BOTH ENDS WITH (1) PC 246 SPACER AND (1) PC 247 WASHER. ADD PC 247 WASHER ON FRONT END AS REQUIRED TO MAINTAIN SPECIFIED ENDPLAY.
3. HI POT PER P.S. 88834420.
4. MOTOR MUST START AT 70 VOLTS.
5. PACK 6 PER CONTAINER, 648 MAX. PER PALLET, PACKING ASSY. 87854178, 12 CONTAINERS PER LAYER, 9 LAYERS PER PALLET, P.S. 88834200 AND P.S. 88834408.
6. CARTON LABELS MUST ALL FACE ONE DIRECTION TOWARD THE OPEN END OF THE PALLET. SEE P.S. 88834408.
7. NO PACKAGING TAPE OVER CARTON LABEL.
8. ROTOR CORE, STATOR CORE AND STATOR BAR ASSEMBLIES ARE COATED WITH TWIN EMULSION.

FRONT SHAFT POSITION

HORIZONTAL — UP / DOWN

CUSTOMER APPROVAL:

SIGNED:

DATE:

TYPICAL PERFORMANCE AT 120 VOLTS 60 Hz

MOTOR SPEED	IDLE			LOADED				LOCKED			BREAK
	R.P.M.	AMP.	WATT	IN.OZ.	R.P.M.	AMP.	WATT	IN.OZ.	AMP.	WATT	IN.OZ.
	3223	.88	37.7	1.42	3000	.89	43.0	2.62	.95	51.6	3.43

CUSTOMER:	FASCO DIST.
PART NUMBER:	K111
APPLICATION:	
MOTOR WEIGHT:	1.0 LBS
ENVIRONMENT:	DRY
FINISH COLOR:	NATURAL
DRAWN BY:	SDM
DATE DRAWN:	09/24/2008

FASCO MOTORS GROUP
AC MOTOR/BLOWER DIVISION

CONFIDENTIAL: DO NOT DUPLICATE OR DISCLOSE TO THIRD PARTIES WITHOUT WRITTEN PERMISSION OF FASCO MOTORS GROUP, AC MOTOR/BLOWER DIVISION.

MOTOR TYPE	DRAWING NUMBER
MOTOR, C - FRAME	7158 1216

B	LA	FR	A	S	C	E	B	A	REV.
00	58	52	X	16	OC	5	A	0	05

If Printed, this is an Uncontrolled Document.