Uncontrolled Copy

SIZE	DRAWING NO.	REV	SHEET
B	5KCP39NFAE52S	2	1

VENTILATION SYSTEM	
SHELL VENTS	OPEN
ENDSHIELD (OPP. LEAD END)	OPEN
ENDSHIELD (LEAD END)	OPEN

RBC PROPRIETARY AND CONFIDENTIAL INFORMATION

This document is the property of REGAL BELOIT CORPORATION ("RBC") including its subsidiaries and divisions and contains proprietary information of RBC. This document is loaned on the express condition that niether it nor the information contained therein shall be disclosed to others without the express written consent of RBC, and that the information shall be used by the recipient only as approved expressly by RBC. This document shall be returned to RBC upon its request. This document may be subject to certain restrictions under U.S. export control laws and regulations.

REVISIONS

REV.	DESCRIPTION	DATE	APPROVED
1.	RELEASED TO PROD PER IS:09-2156	06/03/09	AVL
2	UPDATED AMPS PER WTS TP 3.80 FROM 3.75	06/09/09	AVL

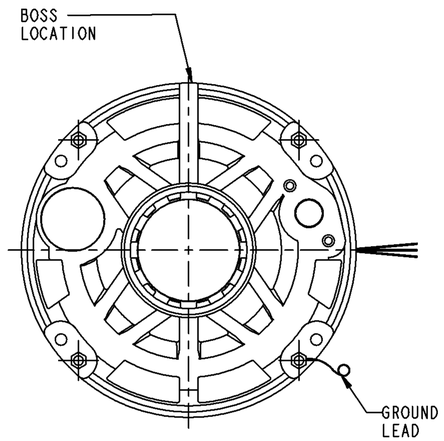

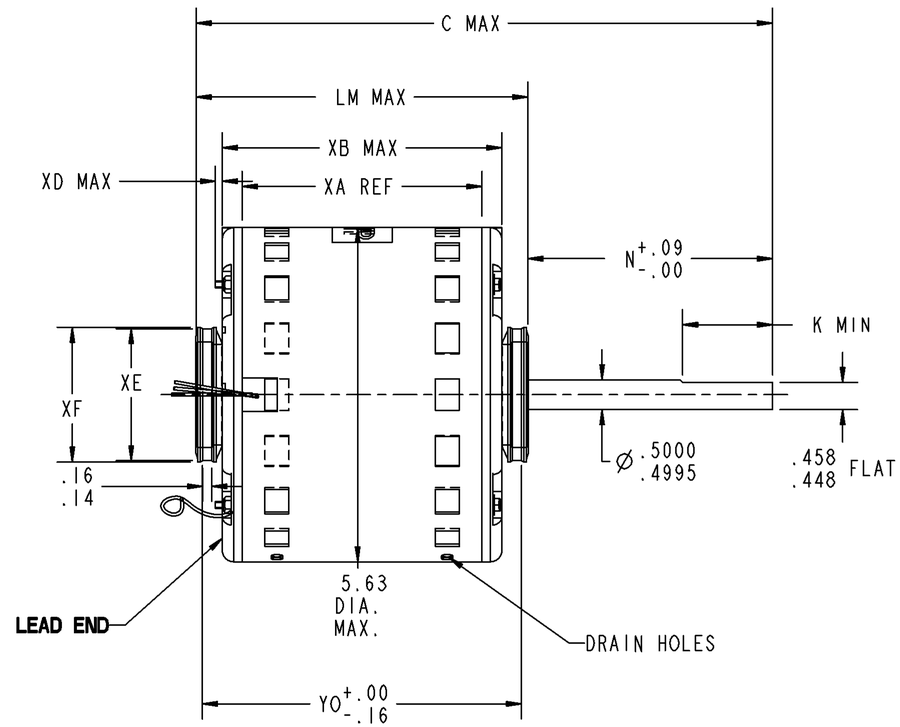

ZH	ZS	XO	XE	XF	XC	XD	YO
N/A	N/A	N/A	2.44	2.50	N/A	.14	7.390

C	N	K	XN	XK	LM	XA	XB
10.14	2.50	2.22	N/A	N/A	7.59	6.07	6.73

NOTE:

1. DIMENSIONS SHOWN ARE NOMINAL UNLESS/OTHERWISE SPECIFIED.

THIRD ANGLE PROJECTION

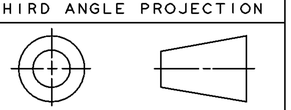

S.NO	CONNECTION	COLOR	EXIT TYPE	EXIT LOC (VIEWING LE)	GAGE	MATERIAL	WALL THK	LENGTH	TERMINATION
1	COMMON LEAD	WHITE	SHELL NOTCH	3:00	18	THERMOPLASTIC	4/64	25.00	.50 BWS
2	CAPACITOR LEAD	BROWN	SHELL NOTCH	3:00	18	THERMOPLASTIC	4/64	21.00	.25 SQC
3	CAPACITOR LEAD	BRN/WHT	SHELL NOTCH	3:00	18	THERMOPLASTIC	4/64	21.00	.25 SQC
4	HIGH SPEED LEAD	BLACK	SHELL NOTCH	3:00	18	THERMOPLASTIC	4/64	25.00	.50 BWS
5	MED SPEED LEAD	YELLOW	SHELL NOTCH	3:00	18	THERMOPLASTIC	4/64	25.00	.50 BWS
6	LOW SPEED LEAD	RED	SHELL NOTCH	3:00	18	THERMOPLASTIC	4/64	25.00	.50 BWS
7	GROUND	GRN-YEL	CLAMPSCREW	4:30	18	THERMOPLASTIC	2/64	12.00	#10 SERR EYELET

NAMEPLATE DATA	
MODEL	5KCP39NFAE52S
CUST P/N	MODEL D818
HP	1/3
RPM	825 (3 SPD)
VOLTS	115
HZ	60
# SPEEDS	3
AMPS	6.80
CAP REQ'D-1	12.5 ufd/370 Volts
CAP REQ'D-2	N/R
CONN. DRW#	NP24X327806
ROTATION	CCW (VIEWED FROM LE)

REGAL-BELOIT CORPORATION
FORTWAYNE, INDIANA

TITLE

MOTOR OUTLINE

(CUSTOMER NAME : FASCO IND)

.

SIZE	DRAWING	REV
B	5KCP39NFAE52S	2

SCALE: NO | ISSUED: 6/2/09 | SHEET 1 OF 1

NAME:501221413 OBJECT:5KCP39NFAE31S DATE:19-Feb-09 17:02:07