SIZE	DRAWING NO.	REV	SHEET
B	5KCP39HFAE14S	4	1

VENTILATION SYSTEM	
SHELL VENTS	CLOSED
ENDSHIELD (OPP. LEAD END)	OPEN
ENDSHIELD (LEAD END)	CLOSED

RBC PROPRIETARY AND CONFIDENTIAL INFORMATION

This document is the property of REGAL BELOIT CORPORATION ("RBC") including its subsidiaries and divisions and contains proprietary information of RBC. This document is loaned on the express condition that niether it nor the information contained therein shall be disclosed to others without the express written consent of RBC, and that the information shall be used by the recipient only as approved expressly by RBC. This document shall be returned to RBC upon its request. This document may be subject to certain restrictions under U.S. export control laws and regulations.

REVISIONS

REV.	DESCRIPTION	DATE	APPROVED
3	ADDED SHELL DRAIN HOLES	03/26/09	PRANEETH
4	MODIFI ED TOL ON XC DIM PER IS09-1155	04/09/09	NAMADEV

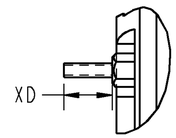

DETAIL D
SCALE .800

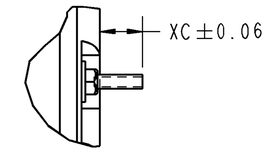

DETAIL C
SCALE .800

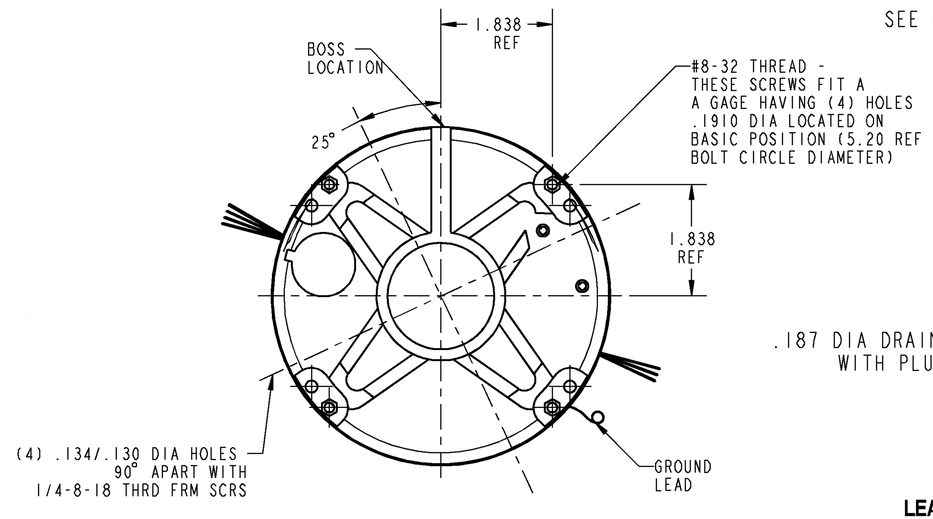

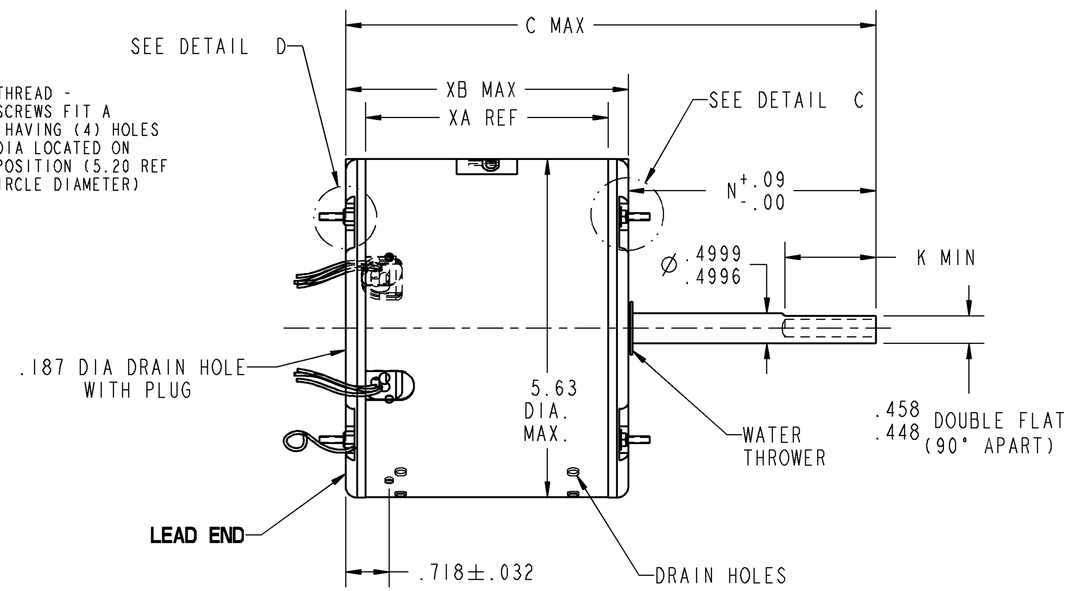

							.76	.79
							XC	XD
10.98	6.42	5.35	N/A	N/A	N/A		3.82	4.48
C	N	K	XN	XK	LM		XA	XB

NOTE:

1. DIMENSIONS SHOWN ARE NOMINAL UNLESS OTHERWISE SPECIFIED.

S/NO	CONNECTION	COLOR	EXIT TYPE	EXIT LOC (VIEWING LE)	GAGE	MATERIAL	WALL THK	LENGTH	TERMINATION
1	COMMON LEAD	WHITE	4-5 LD BUSHING	3:40	18	THERMOPLASTIC	4/64	27.00	.50 BWS
2	REV LEAD	YELLOW	2-3 LD BUSHING	9:40	18	EPDM	2/64	4.00	.25 MALE ISQC
3	CAPACITOR LEAD	BROWN	4-5 LD BUSHING	3:40	18	THERMOPLASTIC	4/64	27.00	.25 FQC
4	REV LEAD	ORANGE	2-3 LD BUSHING	9:40	18	EPDM	2/64	4.00	.25 MALE ISQC
5	CAPACITOR LEAD	BRN/WHT	4-5 LD BUSHING	3:40	18	THERMOPLASTIC	4/64	27.00	.25 FQC
6	REV LEAD	BROWN	2-3 LD BUSHING	9:40	18	EPDM	2/64	4.00	.25 FISQC LO INS FORCE
7	HIGH SPEED LEAD	BLACK	4-5 LD BUSHING	3:40	18	THERMOPLASTIC	4/64	27.00	.50 BWS
8	REV LEAD	PURPLE	2-3 LD BUSHING	9:40	18	EPDM	2/64	4.00	.25 FISQC LO INS FORCE
9	GROUND	GRN-YEL	CLAMPSCREW	4:30	18	THERMOPLASTIC	2/64	12.00	#10 SERR EYELET

NAMEPLATE DATA	
MODEL	5KCP39HFAE14S
CUST P/N	MODEL D797
HP	1/4
RPM	825
VOLTS	208-230
HZ	60
# SPEEDS	1
AMPS	1.60
CAP REQ'D-1	5.00µfd/370Volts
CAP REQ'D-2	N/R
CONN. DRW#	NP24X327691
ROTATION	CCW/CW (VIEWED FROM LE)

REGAL-BELOIT CORPORATION
FORTWAYNE, INDIANA

TITLE

MOTOR OUTLINE

(CUSTOMER NAME : FASCO)

SIZE	DRAWING	REV
B	5KCP39HFAE14S	4

SCALE: NO | ISSUED: 3/26/09 | SHEET 1 OF 1
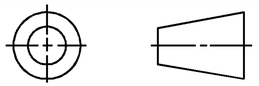
THIRD ANGLE PROJECTION