Uncontrolled Copy

24	REMOVE SHAFT HOLE FROM END PLATE.	SDM 10/07/04	25	CHANGED TO STACK & STAKE ROTOR & STATOR	PLA 06/03/05	26	CHANGE NAMEPLATE TO 0046-4072.	SDM 08/16/10	STANDARD TOLERANCES: ANGULAR +/- 1 DEGREE 2 PLACE DECIMAL +/- .01 3 PLACE DECIMAL +/- .005

If Printed, this is an Uncontrolled Document.

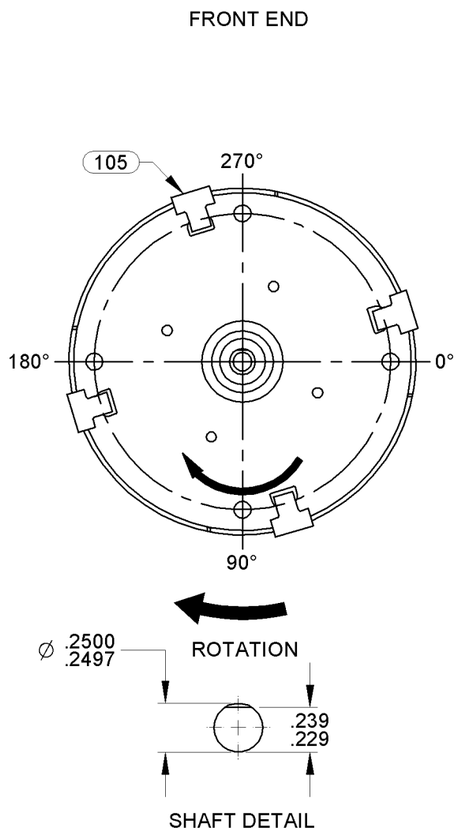

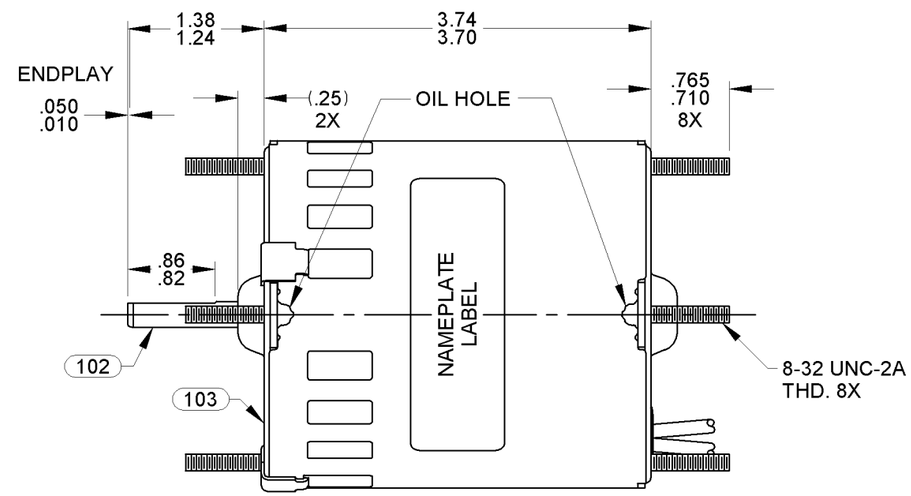

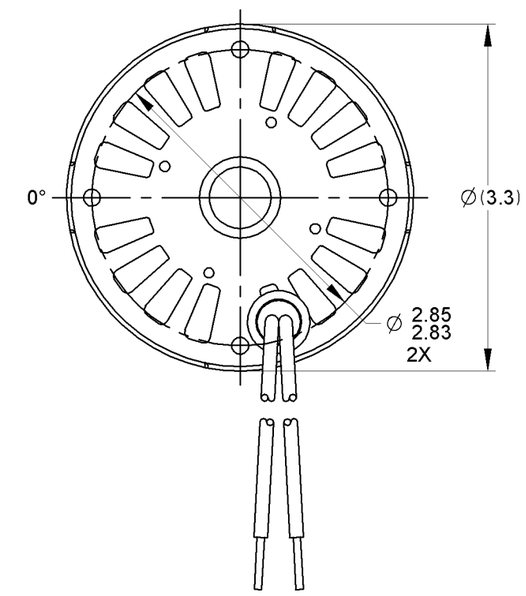

LEAD MATERIAL
18 GA. 125°C 4/64 INS.
EPDM. (2) BLACK
14.00/12.00 IN. LONG
.56/.44 IN. STRIP

NOTES:
1. NO PACKAGING TAPE OVER CARTON LABEL.

6129-9409

0046-4072

0046-4282

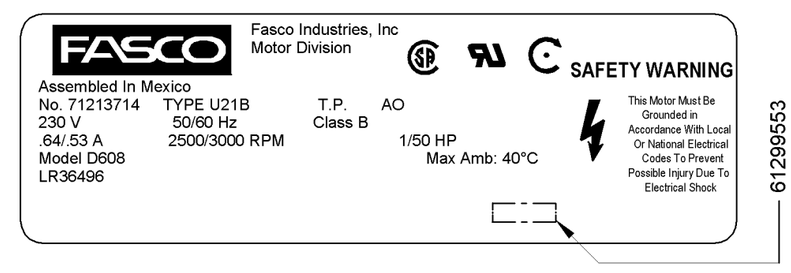

FRONT SHAFT POSITION	
HORIZONTAL	UP / DOWN
CUSTOMER APPROVAL:	
SIGNED:	
DATE:	

TYPICAL PERFORMANCE AT 230 VOLTS 50/60 Hz

MOTOR SPEED	IDLE			LOADED				LOCKED			BREAK
	R.P.M.	AMP.	WATT	IN.OZ.	R.P.M.	AMP.	WATT	IN.OZ.	AMP.	WATT	IN.OZ.
60 HZ	3370	.42	53	7.0	3000	.49	70	4.0	.61	92	8.6
50 HZ	2785	.51	65	8.5	2500	.57	83	7.0	.69	112	11.0

CUSTOMER:	FASCO DIST.
PART NUMBER:	D608
APPLICATION:	COUNTER SALES
MOTOR WEIGHT:	2.8
ENVIRONMENT:	DRY
FINISH COLOR:	BLACK
DRAWN BY:	SDM
DATE DRAWN:	10/07/2004

FASCO MOTORS GROUP
AC MOTOR/BLOWER DIVISION

CONFIDENTIAL: DO NOT DUPLICATE OR DISCLOSE TO THIRD PARTIES WITHOUT WRITTEN PERMISSION OF FASCO MOTORS GROUP, AC MOTOR/BLOWER DIVISION.

MOTOR TYPE	DRAWING NUMBER
SHADED POLE	7121 3714

B	LA	FR	A	S	C	E	B	A	REV.
00	21	30	F	04	AH	5	1	0	26