Uncontrolled Copy

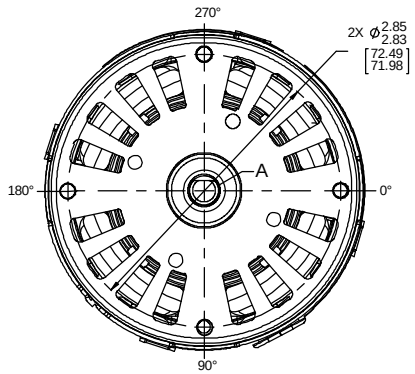

ROTATION

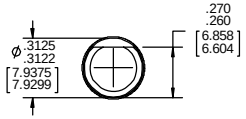

DETAIL A
SHAFT

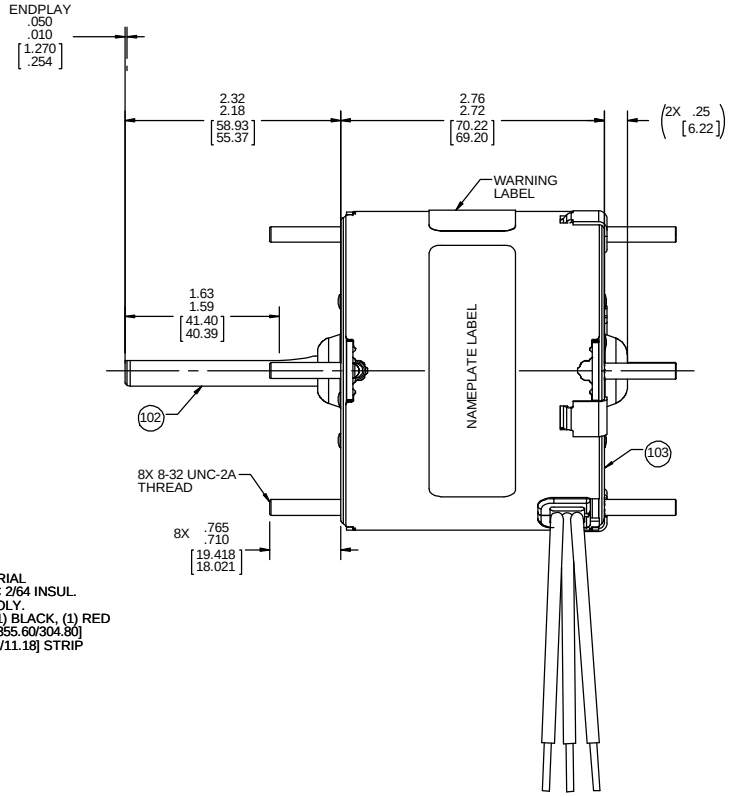

LEAD MATERIAL
18 GA. 125°C 2/64 INSUL.
X-LINKED POLY.
(1) WHITE, (1) BLACK, (1) RED
14.00/12.00 [355.60/304.80]
.56/.44 [14.22/11.18] STRIP

61305568

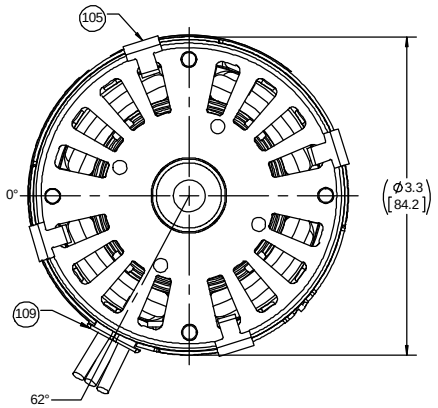

SAFETY WARNING
This motor must be grounded in accordance with local or national electrical codes to prevent possible injury due to electrical shock

AVERTISSEMENT DE SÉCURITÉ
Ce moteur doit être fondée sur conformément â la réglementation locale ou national électrique codes pour prévenir d'éventuelles blessures en raison de choc électrique

LOCATE IN CONVENIENT LOCATION TO READ RIGHT FROM BACK END OF MOTOR

00464072

00469055

Fasco Industries, Inc.
Motor Division

Assembled In Mexico
No. 71631654 TYPE U63B1 T.P. AO
115 V 60 Hz Class B
1.3/1.0 A 1500 RPM 1/30 HP
Model D181 Max Amb: 40°C
LR6319

Connection Diagram
Wht — Common
Blk — High
Red — Low

61299553

NOTES:
1. NO PACKAGING TAPE OVER CARTON LABEL.

CUSTOMER:	FASCO DIST.		APPLICATION:	COUNTER SALES							
CUSTOMER PN:	D181		MOTOR WEIGHT:	3.13 LBS.							
			ENVIRONMENT:	DRY							
HORIZONTAL	UP										
		MOTOR TYPE					REFERENCE SAMPLE				
		SHADED POLE									
		B	LA	FR	A	S	C	E	B	A	
	DOWN	00	63	30	V	05	FE	6	3	0	
TYPICAL PERFORMANCE AT 115 VOLTS 60 HZ											
	IDLE			LOADED				LOCKED			BREAK
MOTOR SPEED	RPM	AMP	WATT	IN OZ	RPM	AMP	WATT	IN OZ	AMP	WATT	IN OZ
HIGH	1753	1.07	63	24.7	1500	1.27	95	9.90	1.73	129	25.8
LOW	1748	.71	41	18.4	1300	.95	72	6.90	1.14	83	17.6

DRAWING REVISION AA	REVISION BY MLS	DATE 6/29/2017
ECO ECO-0126244	APPROVED BY KSA	DATE 6/29/2017
ECO DESCRIPTION UPDATED SAFETY WARING LABEL		

COPYRIGHT REGAL BELOIT AMERICA, INC. ALL RIGHTS RESERVED.
PROPRIETARY AND CONFIDENTIAL INFORMATION - THIS DOCUMENT IS THE PROPERTY OF REGAL BELOIT AMERICA, INC. ("OWNER") AND CONTAINS OWNER'S PROPRIETARY INFORMATION. ANY PERSON, CORPORATION OR OTHER FIRM RECEIVING IT IS DEEMED, BY RECEIVING IT, TO AGREE THAT IT, AND/OR ANY PART OF IT, SHALL NOT BE DISCLOSED TO ANY PERSON, CORPORATION OR OTHER ENTITY, DUPLICATED, AND/OR USED, EXCEPT AS EXPRESSLY APPROVED IN WRITING IN ADVANCE BY OWNER. THIS DOCUMENT SHALL BE RETURNED TO OWNER UPON REQUEST. IT MAY BE SUBJECT TO CERTAIN RESTRICTIONS UNDER APPLICABLE EXPORT CONTROL LAWS AND REGULATIONS.

TOLERANCES UNLESS OTHERWISE SPECIFIED:

DEC.	INCH	mm	ANGLE
.X	±0.1	[±2.5]	±1°
.XX	±0.01	[±0.25]	
.XXX	±0.005	[±0.127]	
.XXXX	±0.0005	[±0.0127]	

REMOVE BURRS & BREAK SHARP EDGES: .003/.015 [.076/.381] X 45°
CORNER FILLETS: R.02 [.51]
MACHINED SURFACES: 125 INCH / 3.2 mm
mm SHOWN IN [BRACKETS]

DRAWN BY MLS	Regal Beloit America, Inc.	
DATE 6/29/2017		
APPROVED BY KSA	DESCRIPTION OUTLINE MOTOR ASSY	
DATE 6/29/2017		
REFERENCE	MATERIAL	PROCESS/FINISH BLACK
THIRD ANGLE PROJECTION	SIZE C	DRAWING NUMBER 71631654
		SHEET 1 OF2

Uncontrolled Copy

NOTES:
1. STAKE STATOR TO MAIN FRAME PER 88830264.
2. MAXIMUM TORQUE REQUIRED TO TURN MOTOR SHAFT IS 3/8 INCH-OUNCE.
3. MAKE-UP WASHERS ARE TO BE ADDED OR DELETED TO ACHIEVE REQUIRED ENDPLAY.

FRONT END

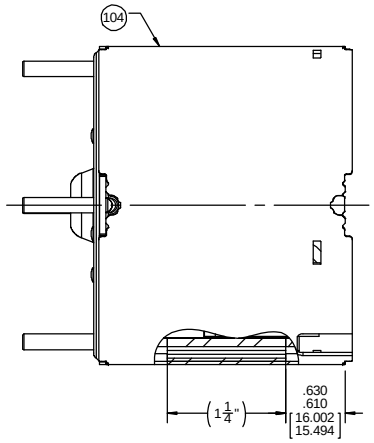

BACK END

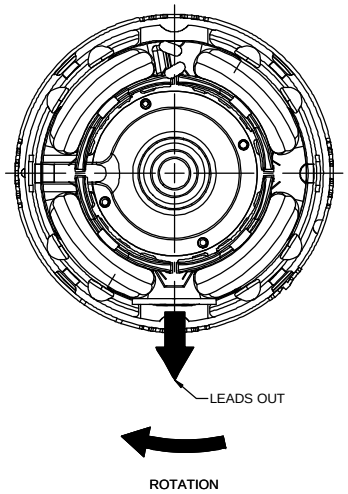

PACKING SPECIFICATIONS

1. PACK 1 PER CARTON, 45 CARTONS PER LAYER, 6 LAYERS PER PALLET, 270 MAX. PER PALLET, PER 88834200.
2. PLACE FOAM RING ON BACK END OF MOTOR, PLACE FILLER TUBE OVER SHAFT EXTENSION, PLACE MOTOR IN CARTON, CLOSE FLAPS AND TAPE.
3. CARTON LABELS MUST ALL FACE ONE DIRECTION TOWARD THE OPEN END OF THE PALLET. SEE 88834408.
4. PLACE (1) FLAT PAD ON PALLET AND (1) BETWEEN EACH LAYER.
5. PLACE (1) FLAT PAD ON TOP LAYER OF PALLET PACK BEFORE STRETCH WRAPPING. PLACE ALL INSPECTION STICKERS AND WRITING ON FLAT PAD TO PREVENT MARKING ON CARTONS.

DRAWING REVISION	REVISION BY	DATE
AA	MLS	6/29/2017
ECO	APPROVED BY	DATE
ECO-0126244	KSA	6/29/2017

ECO DESCRIPTION
UPDATED SAFETY WARING LABEL

COPYRIGHT REGAL BELOIT AMERICA, INC. ALL RIGHTS RESERVED.
PROPRIETARY AND CONFIDENTIAL INFORMATION - THIS DOCUMENT IS THE PROPERTY OF REGAL BELOIT AMERICA, INC. ("OWNER") AND CONTAINS OWNER'S PROPRIETARY INFORMATION. ANY PERSON, CORPORATION OR OTHER FIRM RECEIVING IT IS DEEMED, BY RECEIVING IT, TO AGREE THAT IT, AND/OR ANY PART OF IT, SHALL NOT BE DISCLOSED TO ANY PERSON, CORPORATION OR OTHER ENTITY, DUPLICATED, AND/OR USED, EXCEPT AS EXPRESSLY APPROVED IN WRITING IN ADVANCE BY OWNER. THIS DOCUMENT SHALL BE RETURNED TO OWNER UPON REQUEST. IT MAY BE SUBJECT TO CERTAIN RESTRICTIONS UNDER APPLICABLE EXPORT CONTROL LAWS AND REGULATIONS.

TOLERANCES UNLESS OTHERWISE SPECIFIED:

DEC.	INCH	mm	ANGLE
.X	±0.1	[±2.5]	±1°
.XX	±0.01	[±0.25]	
.XXX	±0.005	[±0.127]	
.XXXX	±0.0005	[±0.0127]	

REMOVE BURRS & BREAK SHARP EDGES: .003/.015 [.076/.381] X 45°
CORNER FILLETS: R.02 [.51]
MACHINED SURFACES: 125/ INCH 3.2/ mm
mm SHOWN IN [BRACKETS]

DRAWN BY	MLS
DATE	6/29/2017
APPROVED BY	KSA
DATE	6/29/2017
REFERENCE	
THIRD ANGLE PROJECTION	

Regal Beloit America, Inc.

DESCRIPTION
OUTLINE
MOTOR ASSY

MATERIAL	PROCESS/FINISH
	BLACK

SIZE	DRAWING NUMBER	SHEET
C	71631654	2 OF2