Uncontrolled Copy

16	CHANGE NAMEPLAT TO 0046-4071, CHANGE LEAD NOTES.	SDM 10/30/07	17	REMOVE BARCODE, UPDATE N/P & UPDATE TO CURRENT STANDARDS.	KSA 11/10/09	18	REVISED PACKING AND ADDED CARTON LABEL NOTES	4002137 MLM 5/25/11

STANDARD TOLERANCES:
ANGULAR +/- 1 DEGREE 2 PLACE DECIMAL +/- .01 3 PLACE DECIMAL +/- .005

If Printed, this is an Uncontrolled Document.

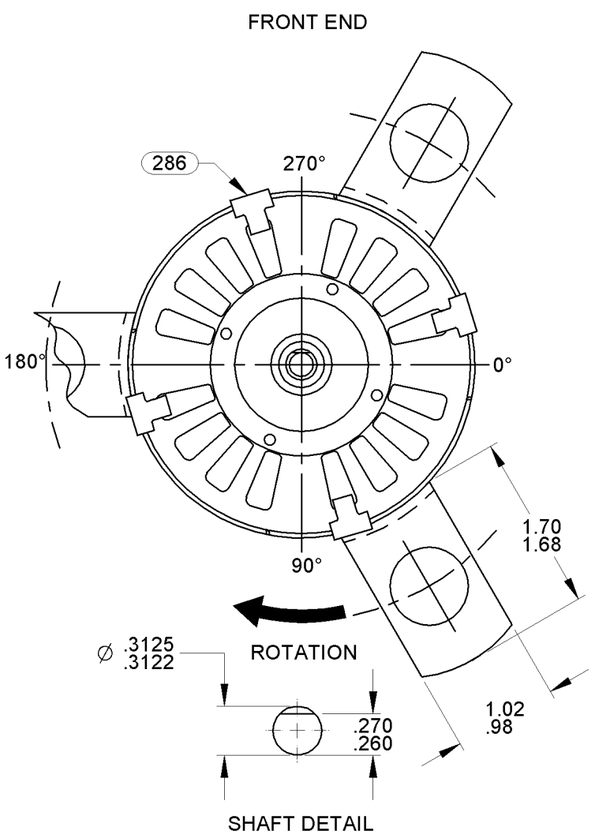

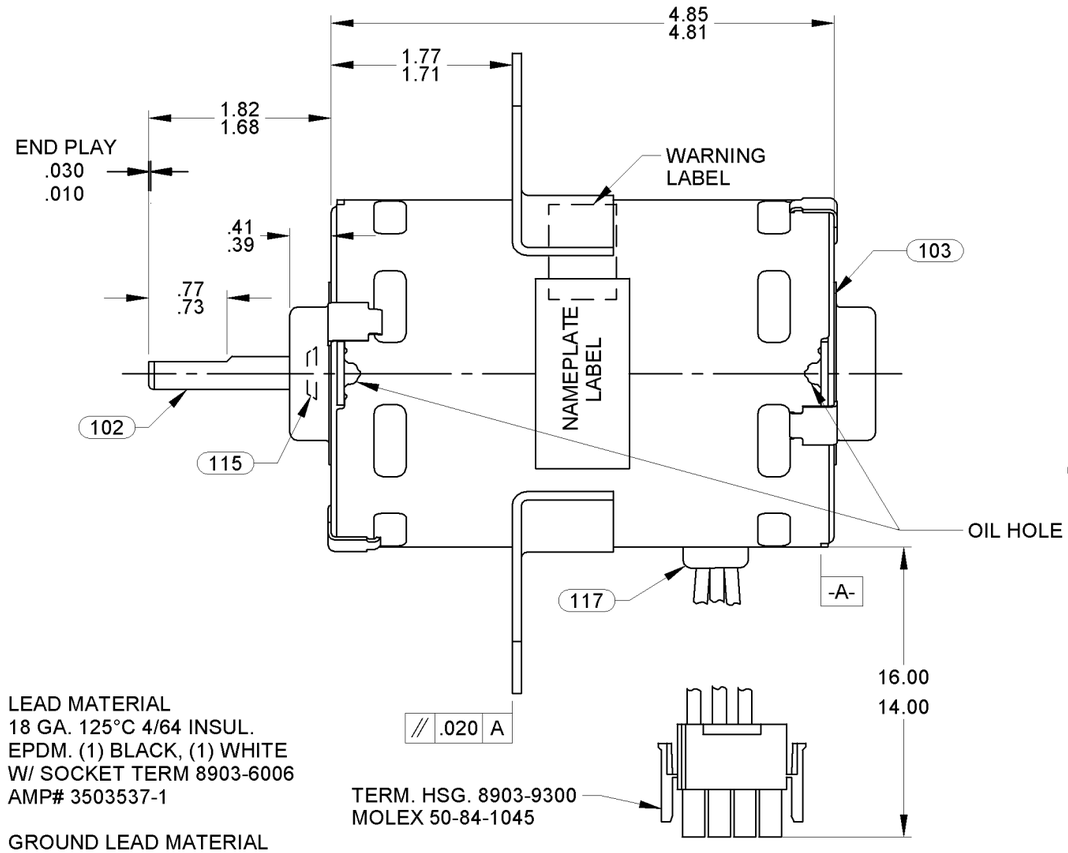

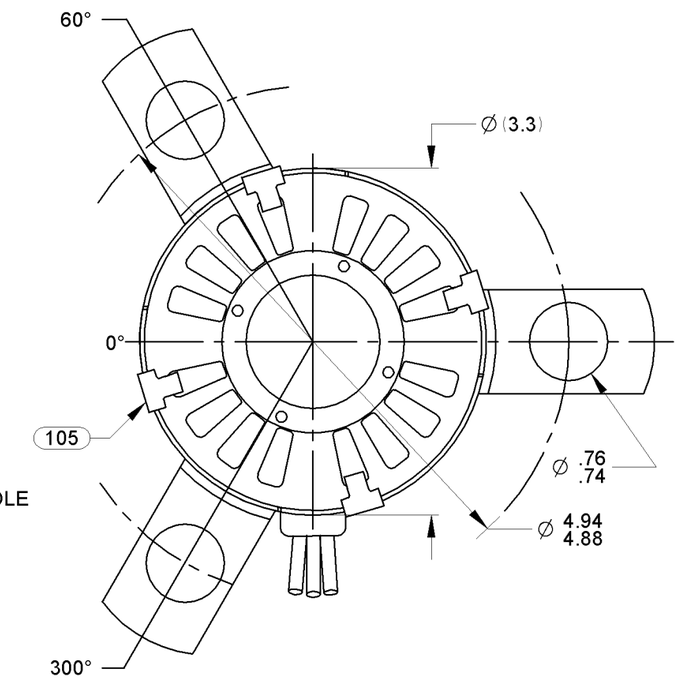

LEAD MATERIAL
18 GA. 125°C 4/64 INSUL.
EPDM. (1) BLACK, (1) WHITE
W/ SOCKET TERM 8903-6006
AMP# 3503537-1

GROUND LEAD MATERIAL
18 GA. 125°C 2/64 INSUL.
X-LINKED POLY, (1) GRN/YEL
SOCKET TERM. #8903-9084
AMP #350536-1

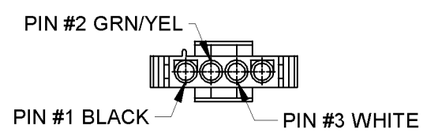

6129-4832

SAFETY WARNING
This Motor Must Be Grounded In Accordance With Local Or National Electrical Codes To Prevent Possible Injury Due To Electrical Shock

0046-4071

FASCO
Fasco Industries, Inc
Motor Division
Assembled in Mexico
No. 71218253 TYPE U21B T.P. AO
115 V 60 Hz Class B
1.55 A 3300 RPM 1/30 HP
Model D1190 Max Amb:40°C
LR36496

6129 9553

NOTES:
1. MOUNTING SURFACES OF BRACKETS MUST BE PARALLEL TO THE FACE OF THE ENDPLATE WITHIN .030 T.I.R. AT ANY DIAMETER ON THE FACE OF THE BRACKETS.
2. MOTOR HAS 416 S.S. SHAFT.
3. NO PACKAGING TAPE OVER CARTON LABEL.

FRONT SHAFT POSITION

HORIZONTAL — UP / DOWN

CUSTOMER APPROVAL:

SIGNED:

DATE:

TYPICAL PERFORMANCE AT 115 VOLTS 60 Hz

MOTOR SPEED	IDLE			LOADED				LOCKED			BREAK
	R.P.M.	AMP.	WATT	IN.OZ.	R.P.M.	AMP.	WATT	IN.OZ.	AMP.	WATT	IN.OZ.
	3496	1.31	82	11.2	3300	1.47	108	4.4	2.15	167	18.1

CUSTOMER:	FASCO DIST.
PART NUMBER:	D1190
APPLICATION:	BOILER BLOWER
MOTOR WEIGHT:	3 1/2 LBS.
ENVIRONMENT:	DRY
FINISH COLOR:	BLACK
DRAWN BY:	PLA
DATE DRAWN:	09/02/2005

FASCO MOTORS GROUP
AC MOTOR/BLOWER DIVISION

CONFIDENTIAL: DO NOT DUPLICATE OR DISCLOSE TO THIRD PARTIES WITHOUT WRITTEN PERMISSION OF FASCO MOTORS GROUP, AC MOTOR/BLOWER DIVISION.

MOTOR TYPE	DRAWING NUMBER
SHADED POLE	7121 8253

B	LA	FR	A	S	C	E	B	A	REV.
00	21	33	F	05	DK	5	4	0	18