Uncontrolled Copy

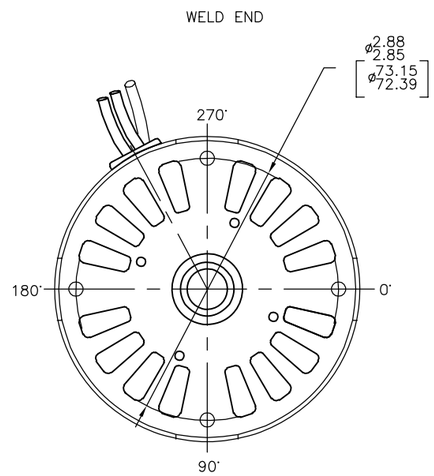

ROTATION

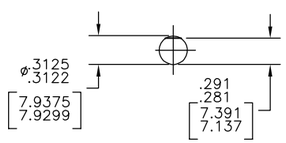

SHAFT DETAIL

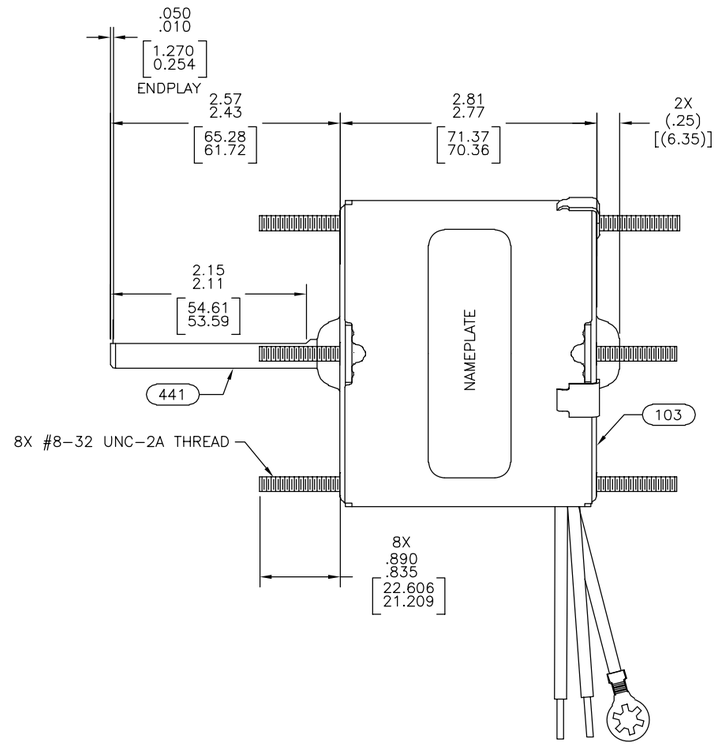

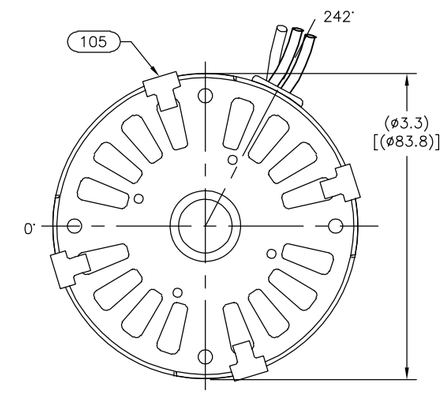

LEAD MATERIAL
18 GA. 125°C 2/64 INSUL.
X-LINKED POLY, (2) BLACK,
14.00/12.00 [355.60/304.80] LONG
WITH .56/.44 [14.22/11.18] STRIP

GROUND LEAD MATERIAL
18 GA. 125°C 2/64 INSUL.
X-LINKED POLY, GRN/YEL
14.00/12.00 [355.60/304.80] LONG
W/RING TERM. 8902-0157
AMP 350436-2

00464537 0046-4282

FASCO Fasco Industries, Inc.
Motor Division

SAFETY WARNING

Assembled in Mexico
No. 71732144 TYPE U73B1 T.P. AO
115 V 60 Hz Class B
1.7 A 1550 RPM 1/25 HP
Model D0030 E40513
Max Amb 40°C

This Motor Must Be Grounded in Accordance With Local Or National Electrical Codes To Prevent Possible Injury Due To Electrical Shock

61299553

NOTES:
1. MOTOR HAS 416 S.S. SHAFT.
2. NO PACKING TAPE OVER CARTON LABEL.

CUSTOMER PN:	D0030	ENVIRONMENT:	DRY
CUSTOMER:	FASCO FDC	APPLICATION:	COUNTER SALES
		MOTOR WEIGHT:	–

CUSTOMER APPROVAL

SIGNED:

DATE:

FRONT SHAFT POSITION

HORIZONTAL UP DOWN

MOTOR TYPE	REFERENCE SAMPLE NUMBER
SHADED POLE	X-0006173-2

B	LA	FR	A	S	C	E	B	A
00	73	30	V	05	FW	5	3	0

TYPICAL PERFORMANCE AT 115 VOLTS 60 HZ

MOTOR SPEED	IDLE			FULL LOAD				LOCKED			BREAK
	RPM	AMP	WATT	IN OZ	RPM	AMP	WATT	IN OZ	AMP	WATT	IN OZ
	1750	1.50	82	34.3	1550	1.72	123	15.0	2.54	179	40.8

ORACLE REV 00B

DRAWING REVISION	REVISION BY	DATE
B	H.ZHU	08-25-2014
ECO	APPROVED BY	DATE
ECO-0058442	D.HUANG	08-25-2014

ECO DESCRIPTION
SEE ECO

COPYRIGHT REGAL BELOIT AMERICA, INC. ALL RIGHTS RESERVED.
PROPRIETARY AND CONFIDENTIAL INFORMATION – THIS DOCUMENT IS THE PROPERTY OF REGAL BELOIT AMERICA, INC. ("OWNER") AND CONTAINS OWNER'S PROPRIETARY INFORMATION. ANY PERSON, CORPORATION OR OTHER FIRM RECEIVING IT IS DEEMED, BY RECEIVING IT, TO AGREE THAT IT, AND/OR ANY PART OF IT, SHALL NOT BE DISCLOSED TO ANY PERSON, CORPORATION OR OTHER ENTITY, DUPLICATED, AND/OR USED, EXCEPT AS EXPRESSLY APPROVED IN WRITING IN ADVANCE BY OWNER. THIS DOCUMENT SHALL BE RETURNED TO OWNER UPON REQUEST. IT MAY BE SUBJECT TO CERTAIN RESTRICTIONS UNDER APPLICABLE EXPORT CONTROL LAWS AND REGULATIONS.

TOLERANCES UNLESS OTHERWISE SPECIFIED

DEC.	INCH	mm	ANGLE
.X	±0.1	[±2.5]	±0.5°
.XX	±0.02	[±0.51]	
.XXX	±0.005	[±0.127]	
.XXXX	±0.0005	[±0.0127]	

REMOVE BURRS & BREAK SHARP EDGES .003/.015 [.076/.381]
CORNER FILLETS .02 [.51]
MACHINED SURFACES 125/ INCH 3.2/ mm
mm SHOWN IN [BRACKETS]

DRAWN BY: J.Zhu
DATE: 05-08-2014
APPROVED BY: M.Chen
DATE: 05-09-2014
REFERENCE .

THIRD ANGLE PROJECTION

REGAL™ Regal Beloit America, Inc.

DESCRIPTION
MODEL-SFHP-3.3

MATERIAL
PROCESS/FINISH BLACK/PAINT

SIZE	DWG NO	SHEET
C	71732144	1-2