Uncontrolled Copy

NOTES:

1. ONE KNOCKOUT REMOVED AS SHOWN BELOW.
2. LEADS TO EXIT OUT THE KNOCKOUT IN THE OUTLET BOX.
3. MAX. VIBRATION .0025 IN.
4. INSPECTION TEST FIXTURING IS REQUIRED.
5. CAPACITOR RATING: 3 MFD/370 VAC.
6. STATIC TAP READING IS TO BE -1.02 MINIMUM CORRECTED TO STANDARD AIR ($0.075\ LB/FT^3$) WITH A 1 5/16 INLET RESTRICTOR.
7. PACK 1 PER CONTAINER, 64 MAX. PER PALLET, 16 PER LAYER, 4 LAYERS PER PALLET. P.S. 8883 4200 AND P.S. 8883 4408
8. CARTON LABELS MUST ALL FACE ONE DIRECTION TOWARD THE OPEN END OF THE PALLET. SEE P.S. 8883 4408.
9. NO PACKAGING TAPE OVER CARTON LABEL.

Connection Diagram

Wht ——— Line
Blk ——— Line
Brn
Brn

DETAIL "A"

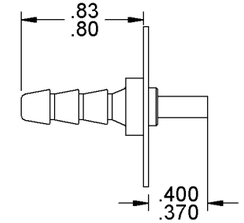

APPLICATION	B	LA	FR	A	S	C	E	B	A
THERMALLY PROTECTED CLASS "B" INSULATION SEALED BALL BEARING 416 S.S. SHAFT	12	62	47	V	03	BT	5	0	0

CUSTOMER: FASCO DIST.

CUSTOMER PART NO.: A329

LEAD MATERIAL
18 GA. 125°C, 2/64 INSUL.
X-LINKED POLY,
BLACK AND WHITE
6.00/4.00 IN. LONG
WITH A .56/.44 IN. STRIP

CAPACITOR LEADS
18 GA. 125°C, 2/64 INSUL.
X-LINKED POLY, BROWN
7.00/5.00 IN. LONG
WITH FFLAG TERMS. 8903-4045
AMP# 42742-2

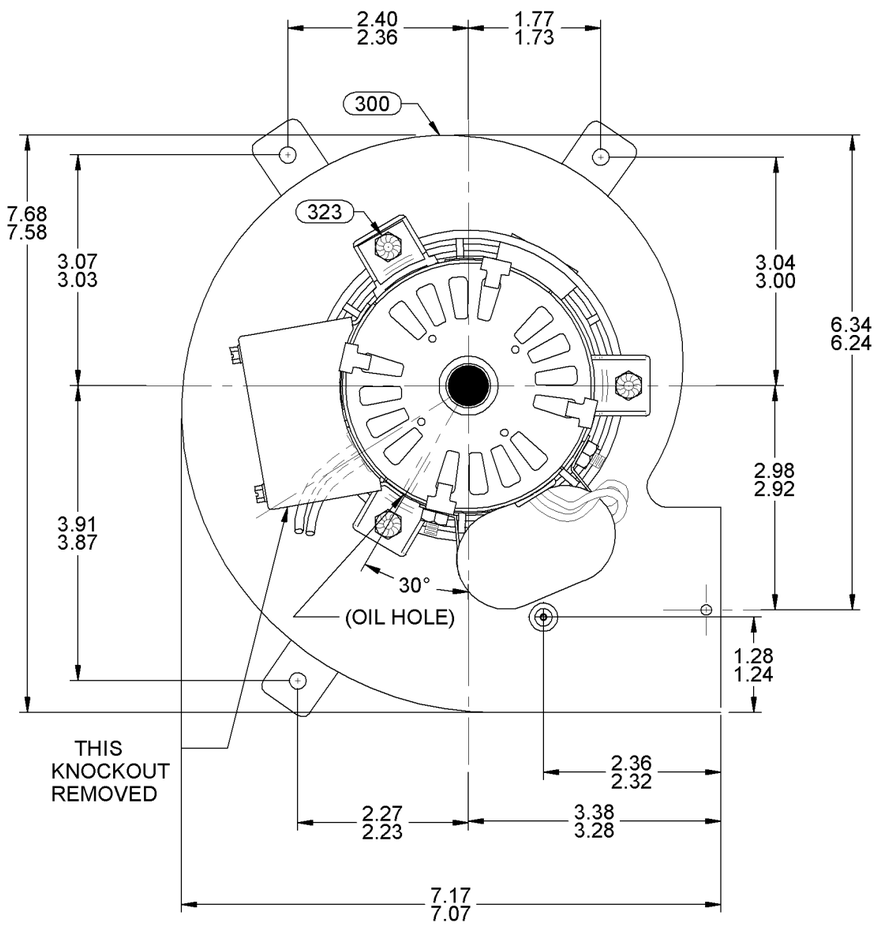

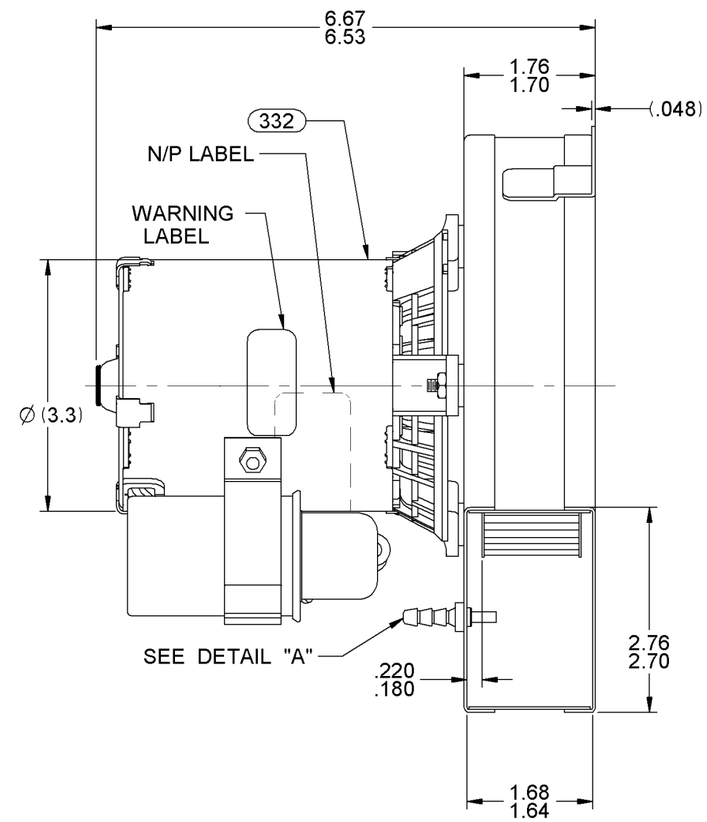

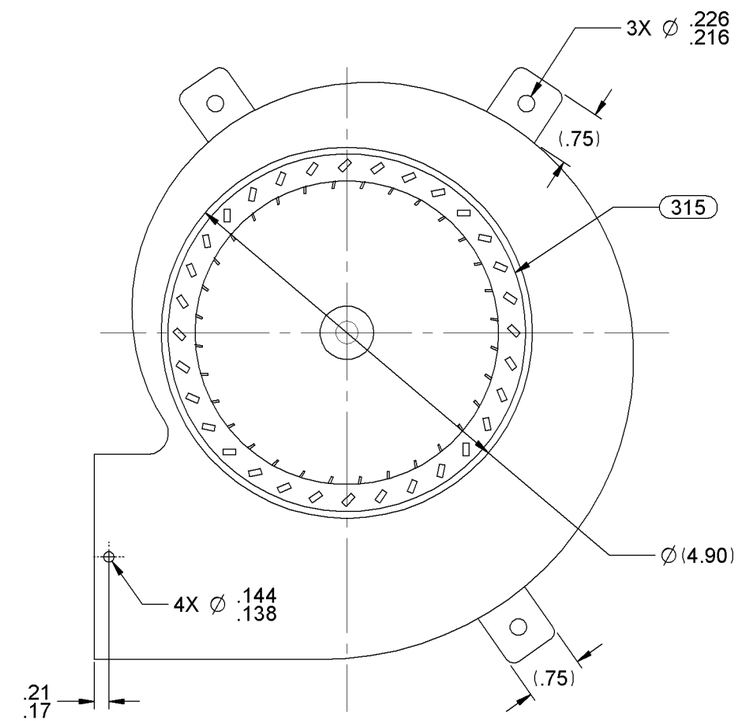

TYPICAL PERFORMANCE TEST DATA
WITH 1 5/16 INLET RESTRICTOR

AT 230 VOLTS 60 HZ.

	R.P.M.	WATTS	AMPS
	3511	63	.28

BLOWER WEIGHT 5.5 LBS.

END PLAY .XX/.XX

ECO. NO.	REV.	DATE	APPROVAL
4003957	02	12-8-11	SED/MLM

UNLESS OTHERWISE SPECIFIED DIMENSIONS ARE IN INCHES TOLERANCES ARE:
FRACTIONS ± 1/16 DECIMALS .XX ± .01 .XXX ± .005 ANGLES ± 1°

APPROVALS		DATE
DRAWN	SED	5-21-07
CHECKED	MLM	5-21-07
FINISH COLOR	BLOWER-NATURAL MOTOR-FLAT BLACK	

FASCO MOTORS GROUP
AC MOTOR/BLOWER DIVISION

CONFIDENTIAL: DO NOT DUPLICATE OR DISCLOSE TO THIRD PARTIES WITHOUT WRITTEN PERMISSION OF FASCO MOTORS GROUP, AC MOTOR/BLOWER DIVISION.

TITLE: BLOWER ASSEMBLY

SIZE: B DWG. NO. 7062 5921 REV. 02

DO NOT SCALE DRAWING SHEET 1 OF 1

If Printed, this is an Uncontrolled Document.