Uncontrolled Copy

NOTES:
1. TO OBTAIN THE .955/.855" IMPELLER LOCATION, PC 143 MUST BE PRESSED ON SHAFT.
2. .031 MAX. AXIAL IMPELLER RUNOUT.
3. SEE SPECIFICATION SHEET 63004335 FOR TESTING REQUIREMENTS.
4. WASHER PC 358 MUST BE BETWEEN DRIVER AND IMPELLER.
5. PACK 1 PER CONTAINER, 6 CONTAINERS PER LAYER, 2 LAYERS PER PALLET. 12 MAX PER PALLET, PACKING ASSY. 87854663, P.S. 88834200 AND P.S. 88834408.
6. PLACE (1) PC 377 GASKET IN PLASTIC BAG AND PLACE IN EACH CONTAINER.
7. CARTON LABELS MUST ALL FACE ONE DIRECTION TOWARD THE OPEN END OF THE PALLET. SEE P.S. 88834408.
8. NO PACKAGING TAPE OVER CARTON LABEL.

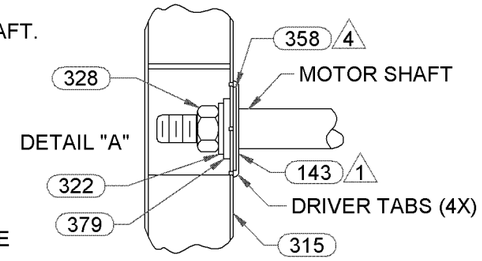

Connection Diagram

High		Low	
Pur	Line	Pur	Line
Blk	Line	Blk	
Orn	Ins	Orn	
Red	Ins	Red	Line
Brn			
Brn			
Grn/Yel	Grd		

APPLICATION GAS FURNACE	B	LA	FR	A	S	C	E	B	A
SEALED BALL BEARING CLASS B INSULATION THERMALLY PROTECTED SS 416 SHAFT	92	62	30	F	08	DS	6	0	0

CUSTOMER FASCO DIST.

CUSTOMER PART NO. A271

LEAD MATERIAL
18 GA. 125°C, 2/64 INSUL.
X-LINKED POLY. (1) PUR, (1) RED, (1) ORN,(1) BLK 14.00/12.00 IN. LONG
MEASURED TO BACK OF TERM.
HSG. W/PIN TERM. 89034153
AMP 350416-1

CAPACITOR LEADS
18 GA. 125° 2/64 INSUL.
X-LINKED POLY. (2) BRN
3.50/4.50 IN. LONG
W/FFLAG TERM. 89034045
AMP 42742-2

GROUND LEAD
18 GA. 125°C, 2/64 INSUL.
X-LINKED POLY, GRN/YEL
6.00/4.00 IN. LONG
W/RING TERM. 00081906
AMP 2-34148-1

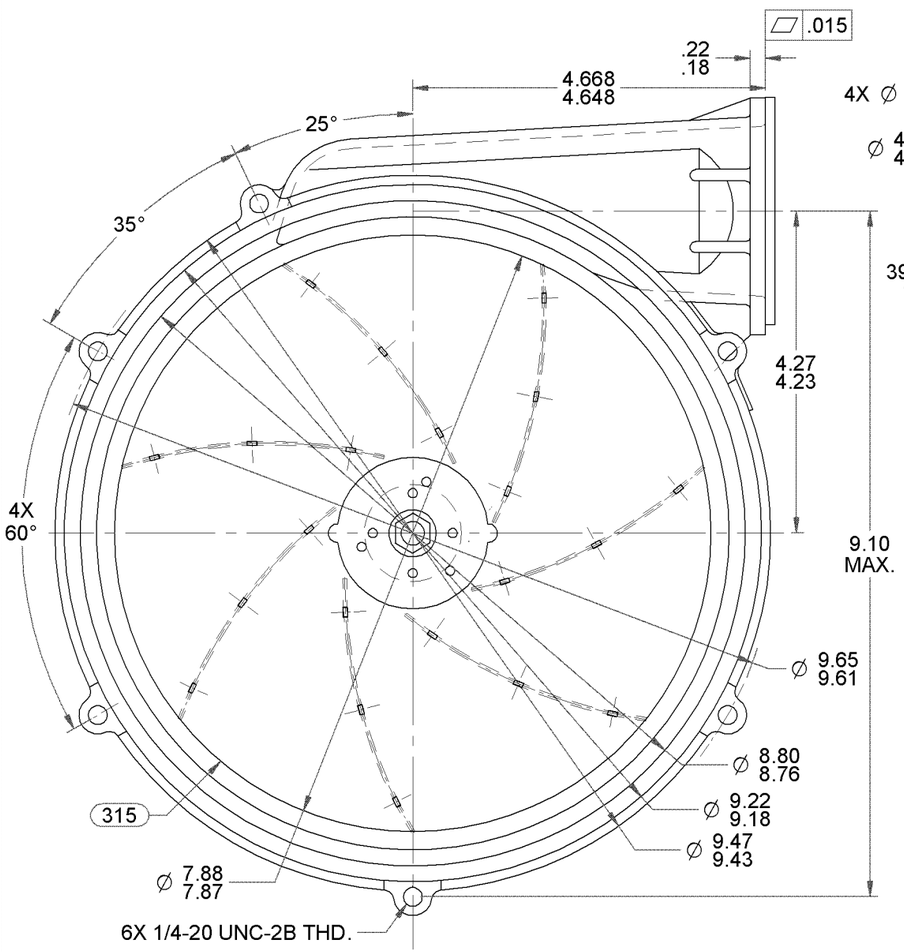

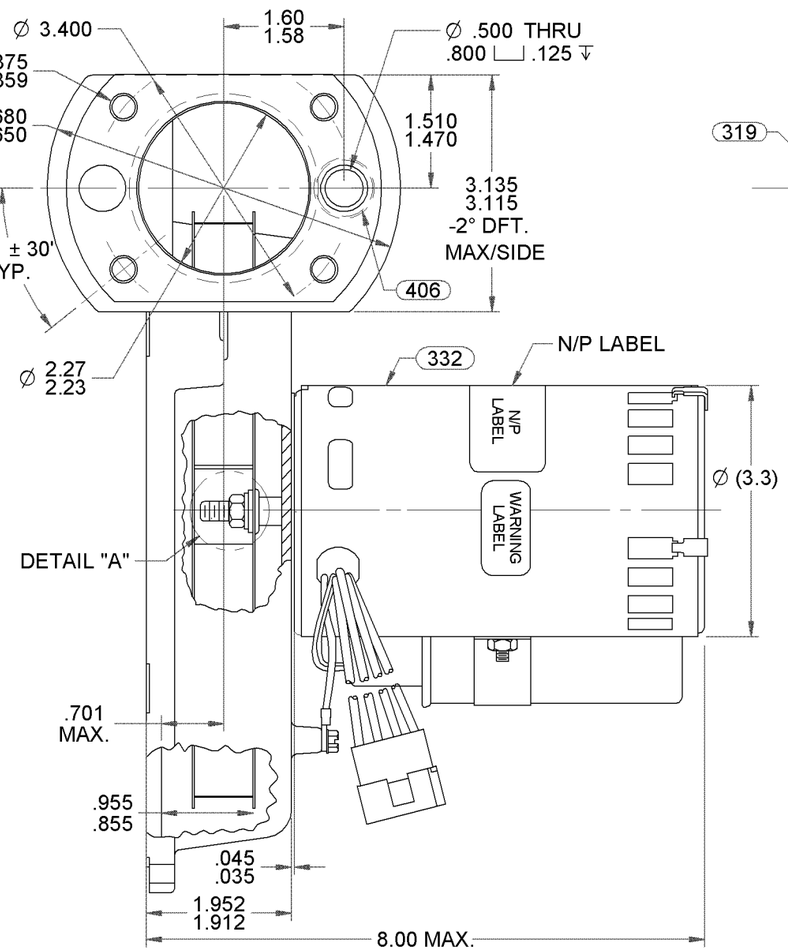

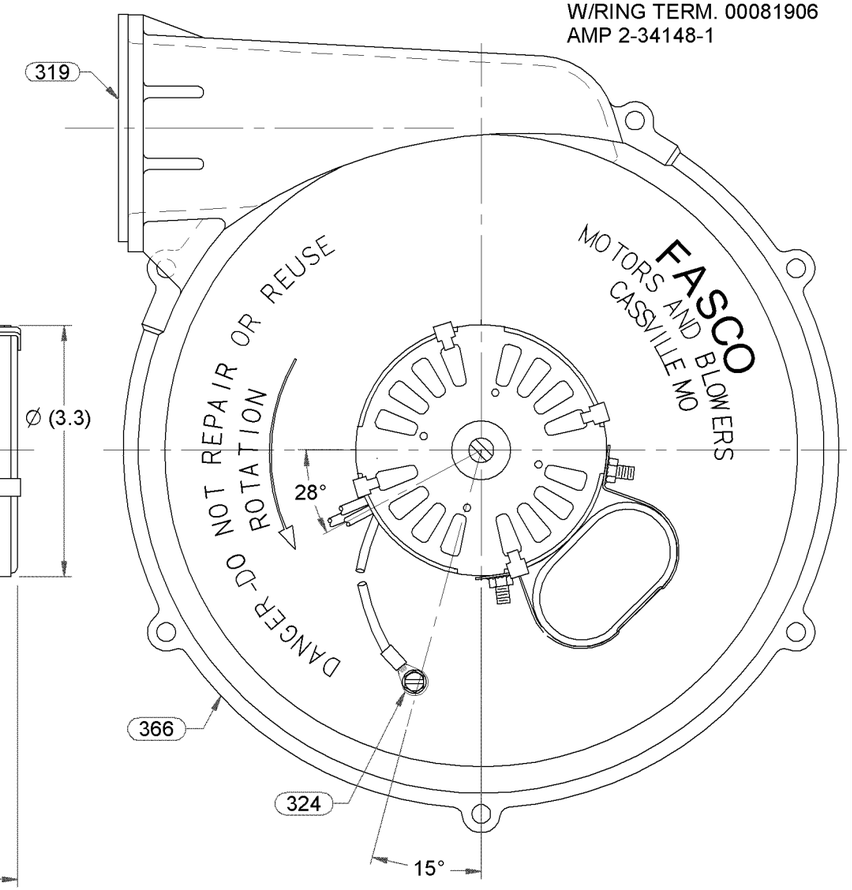

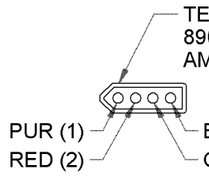

ECO. NO.	REV.	DATE	APPROVAL
4005752	07	6/18/2012	SED/SDM
4006050	08	07/19/2012	MLM/KSA
4006361	09	8/21/2012	SED/BGP
4010243	10	9/5/2013	MLH/PLA

TYPICAL PERFORMANCE TEST DATA
IN FREE AIR WITH 205 MBH INLET ASSEMBLY
(SEE 6300 4335)
AT 230 VOLTS 60 HZ.

	R.P.M.	WATTS	AMPS
HIGH	3525	98	.60
LOW	2990	50	.23
BLOWER WEIGHT 8.38 LBS.			END PLAY XX/XX

UNLESS OTHERWISE SPECIFIED DIMENSIONS ARE IN INCHES TOLERANCES ARE:
FRACTIONS ± 1/16 DECIMALS .XX ± .01 .XXX ± .005 ANGLES ± 1°

APPROVALS		DATE
DRAWN	SED	7-19-05
CHECKED	ATM	7-19-05
FINISH COLOR	MOTOR: BLACK BLOWER: NATURAL	

FASCO MOTORS GROUP
AC MOTOR/BLOWER DIVISION

CONFIDENTIAL: DO NOT DUPLICATE OR DISCLOSE TO THIRD PARTIES WITHOUT WRITTEN PERMISSION OF FASCO MOTORS GROUP, AC MOTOR/BLOWER DIVISION.

TITLE BLOWER ASSEMBLY

SIZE B DWG. NO. 7062 5782 REV. 10

DO NOT SCALE DRAWING SHEET 1 OF 1

If Printed, this is an Uncontrolled Document.