Uncontrolled Copy

ORACLE PART REV. 006

NOTES:
1. INSPECTION TEST FIXTURING IS REQUIRED.
2. PACK 1 PER CONTAINER, 12 CONTAINERS PER LAYER, 3 LAYERS PER PALLET, 36 MAX. PER PALLET, PACKING ASSY. 87854916, PER 88834200.
3. CARTON LABELS MUST ALL FACE ONE DIRECTION TOWARD THE OPEN END OF THE PALLET.
4. NO PACKING TAPE OVER CARTON LABEL.

THERMALLY PROTECTED
CLASS "B" INSLATION
416 SS SHAFT
SEALED BALL BEARING

APPLICATION:	GAS FURNACE	B	LA	FR	A	S	C	E	B	A
CUSTOMER:	FASCO DIST.	PF	21	30	F	06	FR	5	0	0
CUSTOMER PN:	A122	BLOWER - BLACK, MOTOR - FLAT BLACK								

LEAD MATERIAL
18 GA. 125°C 2/64 INSUL.
X-LINKED POLY.
(2) BLACK
14.00/12.00 [355.60/304.80]
SOCKET TERM. 89039084
AMP 350536-1
GROUND LEAD MATERIAL
GRN/YEL
19.00/17.00 [482.60/431.80]
RING TERM. 89039009
AMP 40955

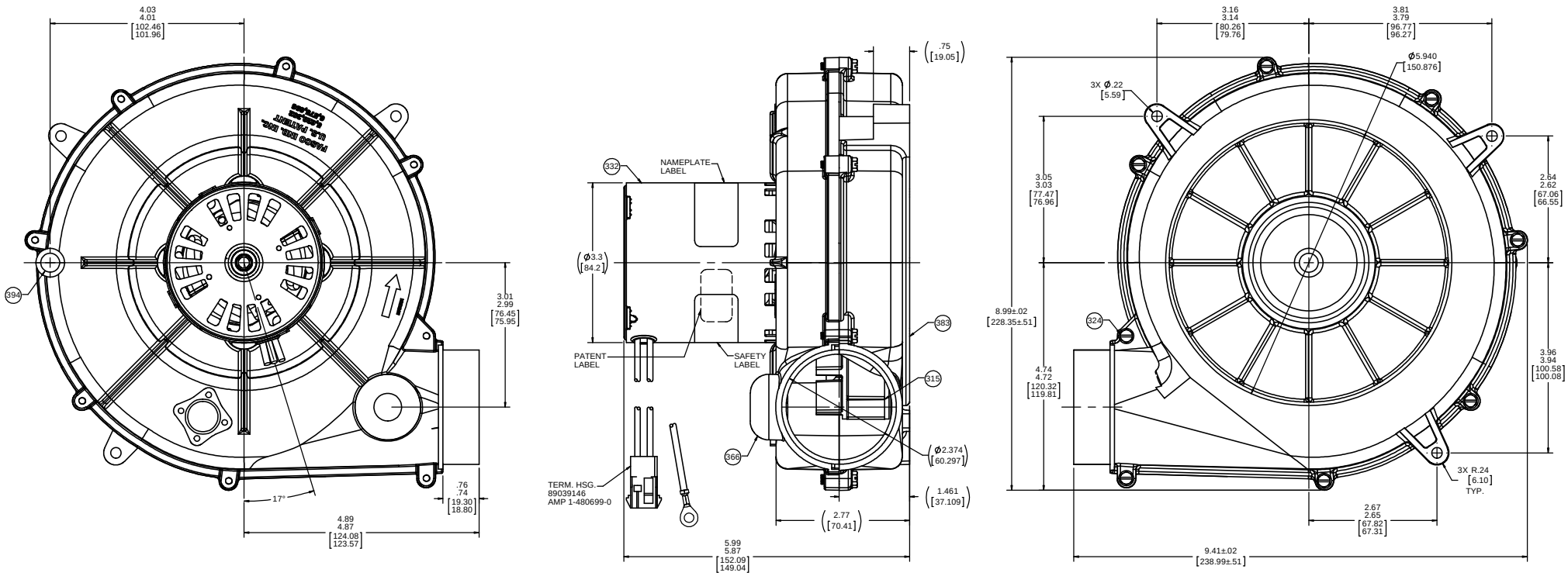

TYPICAL PERFORMANCE TEST DATA
WITH A 1.25 INLET RESTRICTOR

AT 115 VOLTS 60 Hz

	RPM	WATTS	AMPS
	3348	116	1.69
BLOWER WEIGHT 4 1/2 LBS.			ENDPLAY .XX/.XX

DRAWING REVISION G	REVISION BY MLS	DATE 12/10/2015
ECO ECO-0088808	APPROVED BY BGP	DATE 12/10/2015
ECO DESCRIPTION REDRAWN TO SOLIDWORKS		

COPYRIGHT REGAL BELOIT AMERICA, INC. ALL RIGHTS RESERVED.
PROPRIETARY AND CONFIDENTIAL INFORMATION. THIS DOCUMENT IS THE PROPERTY OF REGAL BELOIT AMERICA, INC. CONTAINS OWNER'S PROPRIETARY INFORMATION. ANY PERSON, CORPORATION OR OTHER FIRM RECEIVING IT IS DEEMED BY RECEIVING IT, TO AGREE THAT IT, AND/OR ANY PART OF IT, SHALL NOT BE DISCLOSED TO ANY PERSON, CORPORATION OR OTHER ENTITY, DUPLICATED, AND/OR USED, EXCEPT AS EXPRESSLY APPROVED IN WRITING IN ADVANCE BY OWNER. THIS DOCUMENT SHALL BE RETURNED TO OWNER UPON REQUEST. IT MAY BE SUBJECT TO CERTAIN RESTRICTIONS UNDER APPLICABLE EXPORT CONTROLLAWS AND REGULATIONS.

TOLERANCES UNLESS OTHERWISE SPECIFIED:

DEC.	INCH	mm	ANGLE
.X	±0.1	[±2.5]	±1°
.XX	±0.01	[±0.25]	
.XXX	±0.005	[±0.127]	
XXXX	±0.0005	[±0.0127]	

REMOVE BURRS & BREAK SHARP EDGES: .003/.015 [.076/.381] X 45°
CORNER FILLETS: R.02 [.51]
MACHINED SURFACES: 125 INCH 3.2 mm
mm SHOWN IN [BRACKETS]

DRAWN BY MLS	Regal Beloit America, Inc.
DATE 12/10/2015	DESCRIPTION BLOWER ASSY
APPROVED BY BGP	
DATE 12/10/2015	
REFERENCE	MATERIAL / PROCESS/FINISH
THIRD ANGLE PROJECTION	SIZE D / DRAWING NUMBER 702111849 / SHEET 1 OF 2

Uncontrolled Copy

ORACLE PART REV. 006

NOTES:

1. OIL SLINGER MUST BE LOCATED ON SHAFT AS SHOWN BELOW.
2. BEFORE ASSEMBLING IMPELLER TO SHAFT, PRESS ROPE SEALANT AGAINST EXPOSED FACE OF NUTS TO PROTECT FROM CORROSIVES.
3. ASSEMBLE COMPRESSION RING TO IMPELLER. LOCATE AS SHOWN ON DRAWING. DIMENSION IS FROM THE END OF IMPELLER HUB TO THE COMPRESSION RING. PRESS IMPELLER ASSEMBLY ONTO SHAFT AND LOCATE AS SHOWN ON DRAWING. THEN ASSEMBLE END CAP OVER THE END OF SHAFT AND IMPELLER HUB.
4. LINE UP HOUSING HALVES WITH THREE PILOT. SECURE WITH EIGHT SCREWS. TORQUE SCREWS TO 7 IN. LBS. MAX. NO AIR GAP ALLOWED BETWEEN HOUSING HALVES. NOTE: PLASTIC STRIPS AT TORQUE SETTINGS ABOVE 7 IN. LBS.
5. WHEN EQUIPPED WITH A WATER SEAL, EVERY 20TH BLOWER IS TO BE CHECKED FOR WATER LEAKAGE. IF LEAKERS ARE DISCOVERED, CONTACT ENGINEERING. USE 1/3 PARTS MR. BUBBLE TO 2/3 PARTS WATER.
6. ATTACH PC 319 GASKET TO MOTOR FACE BEFORE ASSEMBLING MOTOR TO PC 366 MOTOR SHELL.

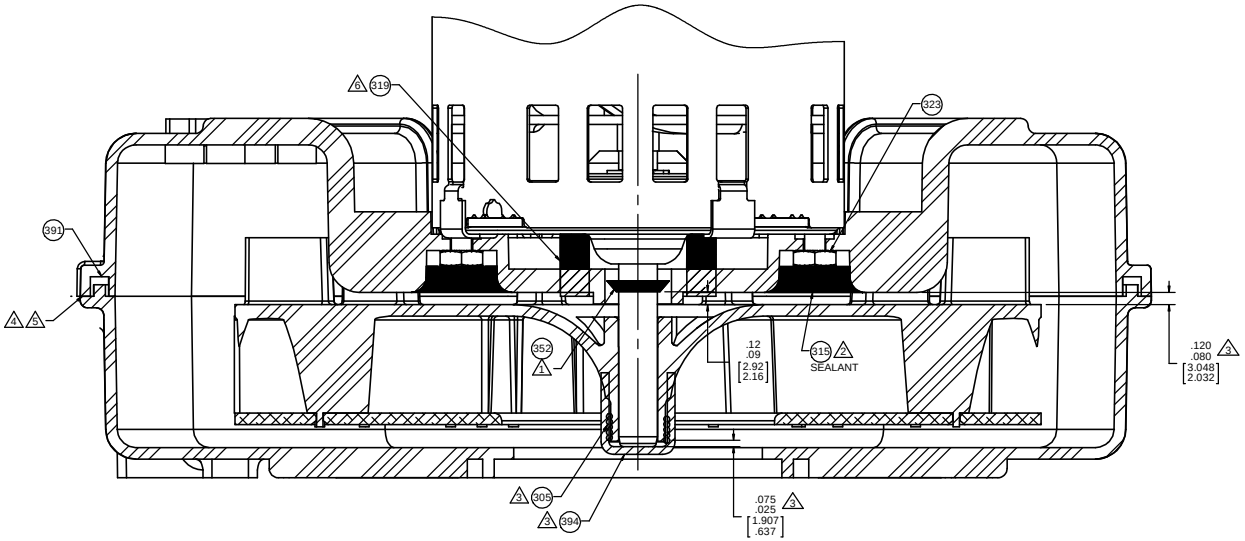

SECTION C-C
SCALE 2 : 1

DRAWING REVISION G	REVISION BY MLS	DATE 12/10/2015	TOLERANCES UNLESS OTHERWISE SPECIFIED: DEC. INCH. mm ANGLE ±1° .X ±0.1 [±2.5] .XX ±0.01 [±0.25] .XXX ±0.005 [±0.127] XXXX ±0.0005 [±0.0127] REMOVE BURRS & BREAK SHARP EDGES: .003/.015 [.076/.381] X 45° CORNER FILLETS: R.02 [.51] MACHINED SURFACES: 125 INCH 3.2 mm mm SHOWN IN [BRACKETS]	DRAWN BY MLS	Regal Beloit America, Inc.
ECO ECO-0088808	APPROVED BY BGP	DATE 12/10/2015		DATE 12/10/2015	DESCRIPTION BLOWER ASSY
ECO DESCRIPTION REDRAWN TO SOLIDWORKS				APPROVED BY BGP	
				DATE 12/10/2015	
				REFERENCE	MATERIAL / PROCESS/FINISH
				THIRD ANGLE PROJECTION	SIZE D / DRAWING NUMBER 702111849 / SHEET 2 OF 2

COPYRIGHT REGAL BELOIT AMERICA, INC. ALL RIGHTS RESERVED. PROPRIETARY AND CONFIDENTIAL INFORMATION. THIS DOCUMENT IS THE PROPERTY OF REGAL BELOIT AMERICA, INC. CONTAINS OWNER'S PROPRIETARY INFORMATION. ANY PERSON, CORPORATION OR OTHER FIRM RECEIVING IT IS DEEMED BY RECEIVING IT, TO AGREE THAT IT, AND/OR ANY PART OF IT, SHALL NOT BE DISCLOSED TO ANY PERSON, CORPORATION OR OTHER ENTITY, DUPLICATED, AND/OR USED, EXCEPT AS EXPRESSLY APPROVED IN WRITING IN ADVANCE BY OWNER. THIS DOCUMENT SHALL BE RETURNED TO OWNER UPON REQUEST. IT MAY BE SUBJECT TO CERTAIN RESTRICTIONS UNDER APPLICABLE EXPORT CONTROL LAWS AND REGULATIONS.