Uncontrolled Copy

REV	ECO	REV BY	DATE	APPD	DATE
L	ECO-0146495	NK	06/07/2018	RG	06/07/2018

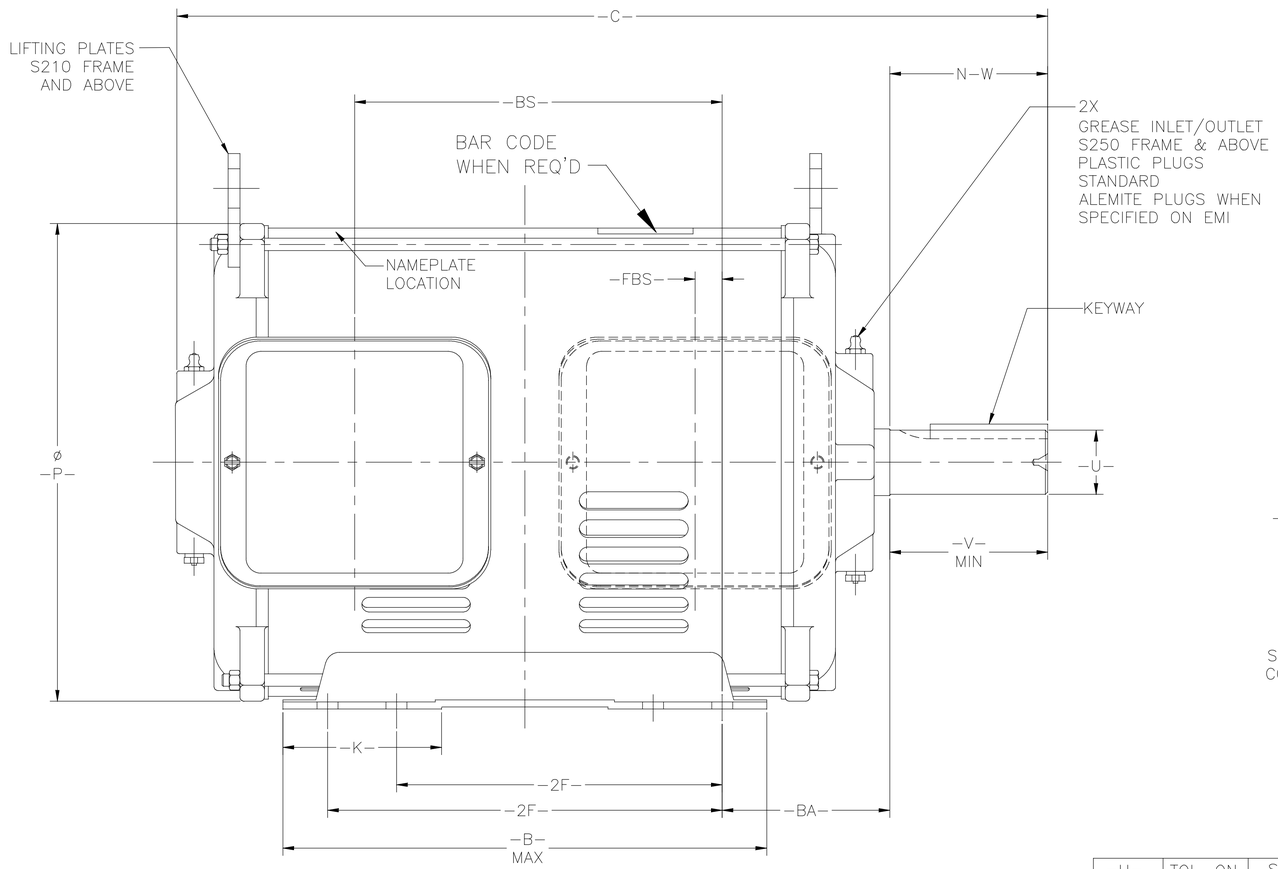

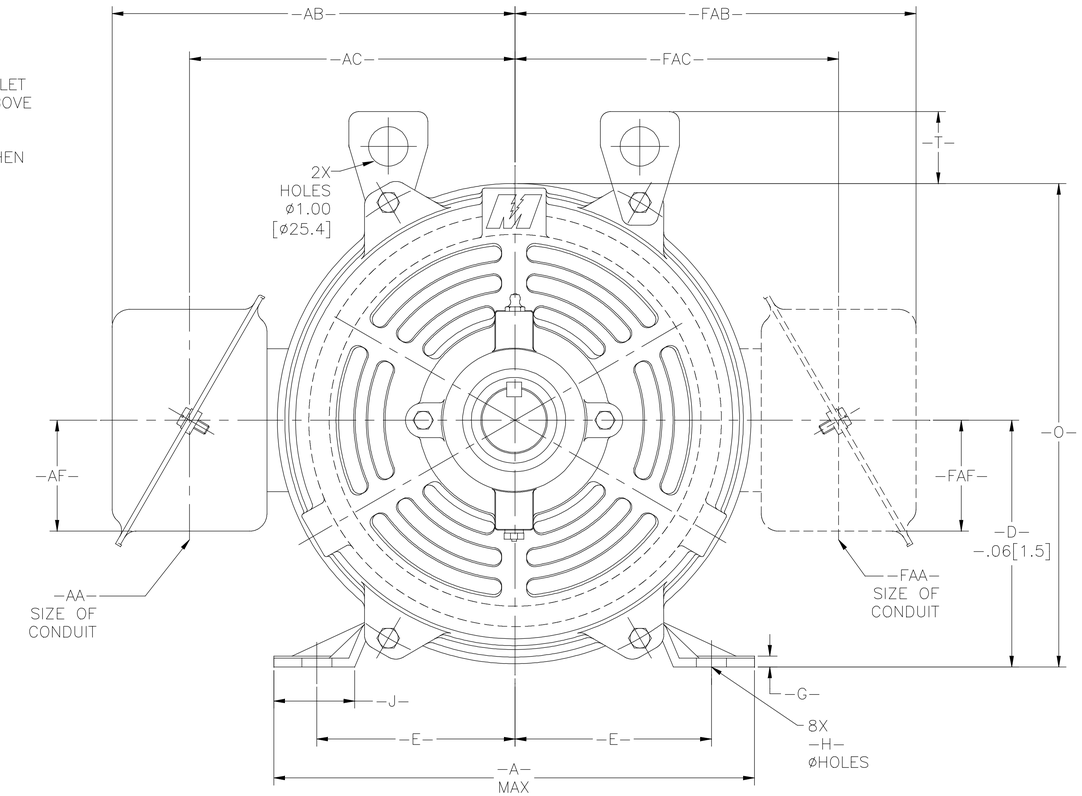

FRAME	TERMINAL BOX F1 MTG -AA-	-AB-	-AC-	-AF-	-BS-	TERMINAL BOX F2 MTG -FAA-	-FAB-	-FAC-	-FAF-	-FBS-	-BA-
S180	3/4	7.63 [193.8]	5.94 [150.8]	2.50 [63.5]	4.94 [125.4]	3/4	7.00 [177.8]	5.63 [143.0]	2.16 [54.8]	0.56 [14.2]	2.75 [69.8]
S210	1	7.63 [193.8]	5.94 [150.8]	2.50 [63.5]	7.38 [187.4]	1	7.00 [177.8]	5.63 [143.0]	2.16 [54.8]	0.19 [4.8]	3.50 [88.9]
S250	1-1/4	10.19 [258.8]	8.16 [207.3]	2.81 [71.4]	9.32 [236.7]	1-1/4	10.19 [258.8]	8.25 [209.6]	2.85 [72.4]	0.68 [72.3]	4.25 [107.9]
G250	1-1/4	10.19 [258.8]	8.16 [207.3]	2.81 [71.4]	11.07 [281.2]	1-1/4	10.19 [258.8]	8.25 [209.6]	2.85 [72.4]	0.68 [72.3]	4.25 [107.9]
S280	1-1/2	10.19 [258.8]	8.16 [207.3]	2.81 [71.4]	10.32 [262.1]	1-1/2	10.19 [258.8]	8.25 [209.6]	2.85 [72.4]	0.68 [72.3]	4.75 [120.6]

-U- DIM.	TOL. ON -U- DIM.	SHAFT RUNOUT
UP TO 1.500 [38.1]	+.0000 [+.000] -.0005 [-.012]	UP TO 1.625 [41.2] .002 [0.05]
OVER 1.500 [38.1]	+.000 [+.00] -.001 [-.03]	OVER 1.625 [41.2] .003 [0.08]

CERTIFICATION OF A.C. MOTORS
CERTIFIED FOR CERTIFICATION
SPEC. NO. NO. ORDER NO. NO.
ORDER I.D. I.D._NO. EMI EMI
TYPE TYPE FRAME FRAME H.P. H.P.
R.P.M. RPM VOLTS VOLTS PHASE PHASE
HERTZ HERTZ AMPS AMPS CODE -
REMARKS REMARKS
REMARKS2
APPROVED BY APPROVED_BY DATE: DATE

FRAME	KEYWAY WIDTH	DEPTH	LENGTH	-A-	-B-	-C-	-D-	-E-	-2F-	-G-	-H-	-J-	-K-	N-W	-O-	-P-	-T-	-U-	-V-
S182T	0.250 [6.35]	0.125 [3.17]	2.50 [63.5]	9.00 [228.6]	7.75 [196.6]	13.65 [346.7]	4.500 [114.3]	3.750 [95.2]	4.500 [114.3]	0.164 [4.16]	.406 [10.31]	1.48 [37.6]	2.93 [74.4]	2.75 [69.9]	8.78 [223.0]	8.53 [216.6]	----	1.125 [28.57]	2.75 [69.8]
S184T	0.250 [6.35]	0.125 [3.17]	2.50 [63.5]	9.00 [228.6]	7.75 [196.6]	13.65 [346.7]	4.500 [114.3]	3.750 [95.2]	5.500 [139.7]	0.164 [4.16]	.406 [10.31]	1.48 [37.6]	2.93 [74.4]	2.75 [69.9]	8.78 [223.0]	8.53 [216.6]	----	1.125 [28.57]	2.75 [69.8]
S213T	0.312 [7.92]	0.156 [3.96]	3.13 [79.5]	10.00 [254]	10.75 [273.0]	17.28 [438.9]	5.250 [133.35]	4.250 [107.95]	5.500 [139.7]	0.180 [4.57]	.406 [10.31]	1.58 [40.1]	3.43 [87.1]	3.38 [85.8]	9.53 [242.0]	8.57 [217.6]	1.77 [44.9]	1.375 [34.9]	3.25 [82.5]
S215T	0.312 [7.92]	0.156 [3.96]	3.13 [79.5]	10.00 [254]	10.75 [273.0]	17.28 [438.9]	5.250 [133.35]	4.250 [107.95]	7.000 [177.8]	0.180 [4.57]	.406 [10.31]	1.58 [40.1]	3.43 [87.1]	3.38 [85.8]	9.53 [242.0]	8.57 [217.6]	1.77 [44.9]	1.375 [34.9]	3.25 [82.5]
S254T	0.375 [9.52]	0.188 [4.77]	3.75 [95.3]	12.18 [309.4]	12.25 [311.6]	22.12 [561.8]	6.250 [158.75]	5.000 [127]	8.250 [209.55]	0.194 [4.92]	.531 [13.48]	2.06 [52.3]	4.06 [103.1]	4.00 [101.6]	12.25 [311.1]	12.00 [304.8]	1.82 [46.2]	1.625 [41.2]	3.88 [98.5]
G256T	0.375 [9.52]	0.188 [4.77]	3.75 [95.3]	12.18 [309.4]	12.25 [311.6]	23.85 [605.8]	6.250 [158.75]	5.000 [127]	8.250 [209.55]	0.194 [4.92]	.531 [13.48]	2.06 [52.3]	4.06 [103.1]	4.00 [101.6]	12.25 [311.1]	12.00 [304.8]	1.82 [46.2]	1.625 [41.2]	3.88 [98.5]
S256T	0.375 [9.52]	0.188 [4.77]	3.75 [95.3]	12.18 [309.4]	12.25 [311.6]	22.12 [561.8]	6.250 [158.75]	5.000 [127]	10.000 [254]	0.194 [4.92]	.531 [13.48]	2.06 [52.3]	4.06 [103.1]	4.00 [101.6]	12.25 [311.1]	12.00 [304.8]	1.82 [46.2]	1.625 [41.2]	3.88 [98.5]
S284T	0.500 [12.7]	0.250 [6.35]	4.38 [111.2]	12.75 [323.8]	13.25 [336.5]	24.25 [615.9]	7.000 [177.8]	5.500 [139.7]	9.500 [241.3]	0.194 [4.92]	.531 [13.48]	1.81 [45.9]	3.81 [96.8]	4.62 [117.3]	13.00 [330.2]	12.00 [304.8]	1.82 [46.2]	1.875 [47.6]	4.50 [114.3]
S284TS	0.375 [9.52]	0.188 [4.77]	3.00 [76.2]	12.75 [323.8]	13.25 [336.5]	22.88 [581.2]	7.000 [177.8]	5.500 [139.7]	9.500 [241.3]	0.194 [4.92]	.531 [13.48]	1.81 [45.9]	3.81 [96.8]	3.25 [82.5]	13.00 [330.2]	12.00 [304.8]	1.82 [46.2]	1.625 [41.2]	3.12 [79.2]
S286T	0.500 [12.7]	0.250 [6.35]	4.38 [111.2]	12.75 [323.8]	13.25 [336.5]	24.25 [615.9]	7.000 [177.8]	5.500 [139.7]	11.000 [279.4]	0.194 [4.92]	.531 [13.48]	1.81 [45.9]	3.81 [96.8]	4.62 [117.3]	13.00 [330.2]	12.00 [304.8]	1.82 [46.2]	1.875 [47.6]	4.50 [114.3]
S286TS	0.375 [9.52]	0.188 [4.77]	3.00 [76.2]	12.75 [323.8]	13.25 [336.5]	22.88 [581.2]	7.000 [177.8]	5.500 [139.7]	11.000 [279.4]	0.194 [4.92]	.531 [13.48]	1.81 [45.9]	3.81 [96.8]	3.25 [82.5]	13.00 [330.2]	12.00 [304.8]	1.82 [46.2]	1.625 [41.2]	3.12 [79.2]

800114
800112
ENG. REF.

GEOMETRIC CHARACTERISTICS & SYMBOLS
- FLATNESS
- STRAIGHTNESS
- ANGULARITY
- PERPENDICULARITY (SQUARENESS)
- PARALLELISM
- ROUNDNESS (CIRCULARITY)
- CYLINDRICITY
- PROFILE OF ANY SURFACE
- PROFILE OF ANY LINE
- RUNOUT
- TRUE POSITION
- CONCENTRICITY
- SYMMETRY

ASME Y14.5M 1994

UNLESS OTHERWISE SPECIFIED
DIM. TOLERANCES ARE AS FOLLOWS:
X XX XXX XXXX
INCH ±.1 ±.02 ±.005 ±.0005
mm ±0.5 ±0.13 ±0.013
ANG. ±.50 DEG
REMOVE BURRS & BREAK SHARP EDGES:
INCH .003-.015 mm 0.1-0.4
CORNER FILLETS TO:
INCH .020 mm 0.5
MACHINE SURFACES:
INCH 125 mm 3.2
METRIC DIMS. SHOWN IN [BRACKETS]

DR BY: SBC 04-25-1995
APPD: MAS 04-25-1994
THIRD ANGLE PROJECTION
EDS DATE 11-11-2011
FORMAT REV H

CONFIDENTIAL: THIS DRAWING AND ITS INFORMATION ARE THE EXCLUSIVE AND CONFIDENTIAL PROPERTY OF REGAL-BELOIT CORPORATION AND ARE NOT TO BE DISCLOSED, DUPLICATED, DISTRIBUTED OR OTHERWISE USED WITHOUT THE WRITTEN CONSENT OF REGAL-BELOIT CORPORATION. -ALL RIGHTS RESERVED.

REGAL REGAL-BELOIT CORPORATION

DESCRIPTION
OUTLINE
MOT-S180/S280 F1/F2 STDT

SIZE D DWG NO 80009201
SCALE NONE SHEET 1